6.5 MULTIPLE PUMPS

CONTENTS PGE104

Ordering Code

6.5.1 External Gear Pump

Technical Information

6.5.2 Specifications
6.5.3 Hydraulic fluids
6.5.4 Viscosity range
6.5.5 Temperature range
6.5.6 Seals
6.5.7 Filtration
6.5.8 General notes
6.5.9 Max. drive and through drive torques
6.5.10 Pressure restrictions for through drive pumps
6.5.11 Installation notes

Dimensions

6.5.12 Drive shafts for front pump size 1
6.5.13 Drive shafts for front pump size 2
6.5.14 Drive shafts for front pump size 3
6.5.15 Mounting flange for front pump size 1
6.5.16 Mounting flange for front pump size 2
6.5.17 Mounting flange for front pump size 3
6.5.18 Ports

Preferred series

6.5.19 Double pump size 1
6.5.20 Triple pump size 1
6.5.21 Double pump size 2
6.5.22 Triple pump size 2
6.5.23 Double pump size 2 / size 1
6.5.24 Triple pump size 2 / size 2 / size 1
6.5.25 Triple pump size 2 / size 1 / size 1
6.5.26 Double pump size 3
6.5.27 Triple pump size 3
6.5.28 Double pump size 3 / size 2
6.5.29 Triple pump size 3 / size 3 / size 2
6.5.30 Triple pump size 3 / size 2 / size 2
6.5.31 Double pump size 3 / size 1
6.5.32 Triple pump size 3 / size 1 / size 1
6.5.33 Triple pump size 3 / size 2 / size 1

ORDERING CODE

6.5.1 External Gear Pump

PGE104 – 1000 / 1000 / 1000 – R B R 1 / 1 / 1 – N – XXXX

External gear pump

Displacement

	Stage 1		Stage 2		Stage 3
Size 1	100 125 160 200 250 315 365 420 500 610 740	/	100 125 160 200 250 315 365 420 500 610 740	/	100 125 160 200 250 315 365 420 500 610 740
Size 2	450 630 820 1000 1130 1200 1400 1500 1600 1900 2200 2500	/	450 630 820 1000 1130 1200 1400 1500 1600 1900 2200 2500	/	450 630 820 1000 1130 1200 1400 1500 1600 1900 2200 2500
Size 3	2000 2250 2500 2800 3200 3600 4200 4600 5000 5500 6000	/	2000 2250 2500 2800 3200 3600 4200 4600 5000 5500 6000	/	2000 2250 2500 2800 3200 3600 4200 4600 5000 5500 6000

Shaft rotation (viewed from shaft end)

R Clockwise
L Anti-clockwise

Shaft

A Tapered keyed shaft 1:5
B Tapered keyed shaft 1:8
E Splined shaft SAE A - J 744 16-4 9T (only for front pump size 2)
F Splined shaft SAE B - J 744 22-4 13T (only for front pump size 3)

PGE104 – 1000 / 1000 / 1000 – R B R 1 / 1 / 1 – N – XXXX

Mounting flange

L	2-hole mounting, centering Ø 32 mm (only for front pump size 1)
Q	Square flange, centering Ø 25.4 mm (only for front pump size 1)
N	2-hole mounting, centering Ø 50 mm (only for front pump size 2)
R	Square flange, centering Ø 36.5 mm (only for front pump size 2)
T	Square flange, centering Ø 80 mm (only for front pump size 2)
W	SAE J 744 82-2 A Ø 82.55 mm (only for front pump size 2)
S	Square flange, centering Ø 50.8 mm (only for front pump size 3)
V	Square flange, centering Ø 105 mm (only for front pump size 3)
X	SAE J 744 101-2 B Ø 101.6 mm (only for front pump size 3)

Ports

1	Pipe thread ISO 228-1
2	Metric thread DIN 3852-1
3	Thread UN 2B SAE O-ring boss
4	Square flange (Italian design)
5	Square flange DIN 3901/ ISO 8435
7	SAE flange with metric threads (only for size 3)
8	SAE flange with UNC threads (only for size 3)
9	Special ports (only on request)

Seals

N	NBR
V	FPM

Modification number

XXXX	Determined by manufacturer

Not all options in the ordering code are possible.
Only combinations of the same size or in descending order are possible.
Please refer to 6.5.19 ff - Preferred series, or consult HYDAC.
Special options are possible on request.

6.5.2 Specifications

Single pump Size 1			100	125	160	200	250	315	365	420	500	610	740
Geometric displacement		[cm³/rev]	1	1.25	1.6	2	2.5	3.15	3.65	4.2	5	6.1	7.4
Pressure	Rated	[bar]	250									200	170
	Peak		300									230	200
Drive speed	Min.	[rpm]	750										
	Max.		3500								3000	2500	
Approx. weight		[kg]	1	1.02	1.04	1.05	1.07	1.11	1.14	1.18	1.25	1.3	1.37

Single pump Size 2			450	630	820	1000	1130	1200	1400	1500	1600	1900	2200	2500
Geometric displacement		[cm³/rev]	4.5	6.3	8.2	10	11.3	12	14	15	16	19	22	25
Pressure	Rated	[bar]	250									200	180	160
	Peak		300						280			230	210	150
Drive speed	Min.	[rpm]	750											
	Max.		3500							2500			2000	
Approx. weight		[kg]	3.34	3.36	3.37	3.57	3.62	3.64	3.78	4.16	4.2	4.32	4.44	4.56

Single pump Size 3			2000	2250	2500	2800	3200	3600	4200	4600	5000	5500	6000
Geometric displacement		[cm³/rev]	20	22.5	25	28	32	36	42	46	50	55	60
Pressure	Rated	[bar]	250					240	230	210	185	165	150
	Peak		300					280	270	250	230	200	180
Drive speed	Min.	[rpm]	750										
	Max.		3000					2800	2500	2300	2100	1750	
Approx. weight		[kg]	7.83	8.0	8.16	8.34	8.78	8.99	9.25	9.47	9.60	9.85	10.10

The continuous and maximum pressures given here only apply to pumps with flange ports. If threaded ports are required, the performance will be reduced. To find out whether a pump with threaded ports can be used in a high pressure application, please contact HYDAC.

6.5.3 Hydraulic fluids

The pump series is designed for use with

HL Hydraulic oil (normal mineral oil) and

HLP Hydraulic oils of the R&O type (Rust and Oxidation inhibitor)

6.5.4 Viscosity range

Normal operating viscosity:
16 - 200 cSt (mm²/s)

For other viscosity ranges, please contact HYDAC.

6.5.5 Temperature range

Ambient temperature range
-22 to 55 °C

Fluid temperature range
NBR
-25 to 85 °C
Viton
-15 to 90 °C

6.5.6 Seals

The pump series is equipped with NBR seals.

If special hydraulic fluids are used, the seal material must be changed if required. Please contact HYDAC.

6.5.7 Filtration

For maximum service life of the pump and system components, the system should be protected from contamination by effective filtration.

Cleanliness class:

21/ 18/ 15 to ISO 4406:1999

or

Class 9 to NAS 1638 or cleaner.

At system pressures above 160 bar cleanliness class:

19/17/14 to ISO 4406:1999

or

Class 8 to NAS 1638 is required.

6.5.8 General notes

Gear pumps can be combined to form double or triple units (for larger units please contact HYDAC). Generally, the specifications for single pumps apply, but the following must be observed:

- Only pumps of the same size or in decreasing order of size can be combined.
- It is recommended that the pump with the largest displacement is used as the front pump.
- The maximum speed of the multiple unit is limited to that of the individual stage with the lowest speed.
- The maximum pressure of the pump unit or the individual stages is determined by the maximum drive and through drive torques (see point 6.5.9).

6.5.9 Max. drive and through drive torques

Size	Drive shaft	Max. drive torque	Max. through drive torque		
			Secondary pump Size 1	Secondary pump Size 2	Secondary pump Size 3
1	Tapered 1 : 5	30 Nm	30 Nm		
	Tapered 1 : 8	30 Nm			
2	Tapered 1 : 5	193 Nm	30 Nm	65 Nm	
	Tapered 1 : 8	198 Nm			
	Splined SAE A	86 Nm			
3	Tapered 1 : 5	301 Nm	30 Nm	65 Nm	228 Nm
	Tapered 1 : 8	218 Nm			
	Splined SAE B	272 Nm			

The resulting torque can be calculated by the following formula:

$$M_{max} = \frac{\Delta p_1 \bullet V_1}{20 \bullet \pi \bullet \eta_{mh}} + \frac{\Delta p_2 \bullet V_2}{20 \bullet \pi \bullet \eta_{mh}} + \frac{\Delta p_3 \bullet V_3}{20 \bullet \pi \bullet \eta_{mh}}$$

Efficiency $\eta_{mh} \approx 0.8 - 0.9$

6.5.10 Pressure restrictions for through drive pumps

There is a pressure restriction at maximum pressure for the secondary and any further pumps due to the maximum permitted through drive torque.

Size	Displacement [cm³/rev]	Peak pressure [bar]
2	16	220
	19	190
	22	160
	25	130

6.5.11 Installation notes

The pump can be installed horizontally or vertically with the shaft at the top. If the pump is installed on the tank or above the oil level, the distance between the pump inlet and the oil level should not exceed 1 metre.

When installing a HYDAC pump always ensure that the fluid remains in the pump during stoppages.

B. Suction line

If the pump is installed above the oil level, particular attention must be paid to the suction pressure. The minimum cross-section of the suction pipe must be equal to or larger than the cross-section of the pump port. The suction pressure must be kept within the values specified.

Minimum suction pressure:
0.8 bar abs.

Maximum suction pressure:
2.2 bar abs.

C. Drive

Use a flexible coupling whenever possible. There must not be any radial or axial forces on the pump shaft. The maximum permitted misalignment is 0.2 mm and the angular deviation must be less than 0.2°. Where there may be excessive bending moments or vibrations, the pump unit must be supported by suitable means.

DIMENSIONS

6.5.12 Drive shafts for front pump size 1

A Tapered keyed shaft 1:5

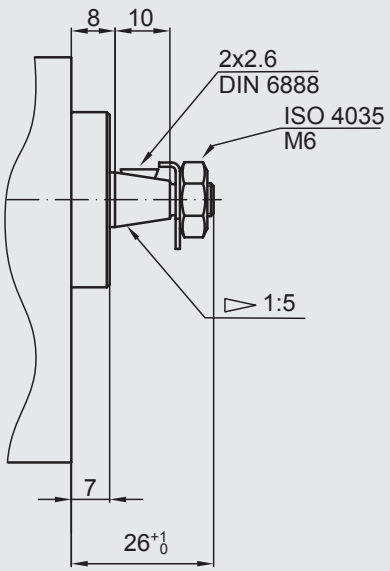

relevant mounting flange: **L**

B Tapered keyed shaft 1:8

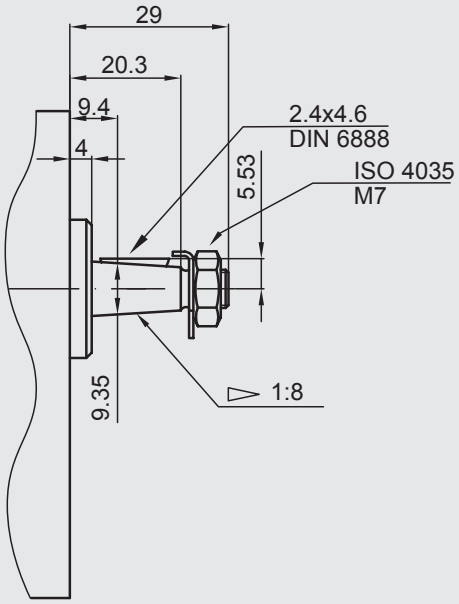

relevant mounting flange: **Q**

6.5.13 Drive shafts for front pump size 2

A Tapered keyed shaft 1:5

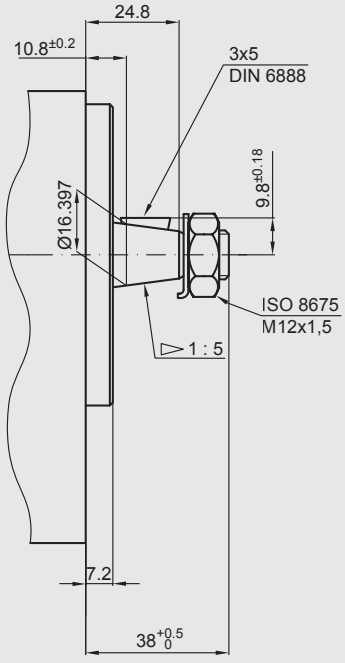

relevant mounting flange: **N** **T**

B Tapered keyed shaft 1:8

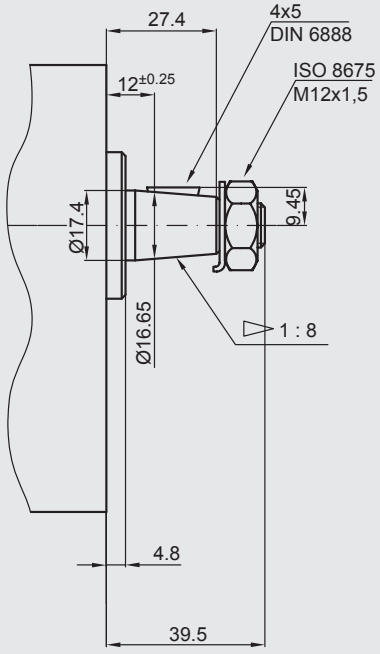

relevant mounting flange: **R**

E Splined shaft SAE A - J 744 16-4 9T

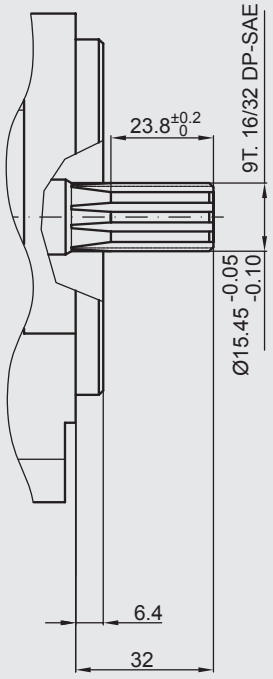

relevant mounting flange: **W**

6.5.14 Drive shafts for front pump size 3

A Tapered keyed shaft 1:5

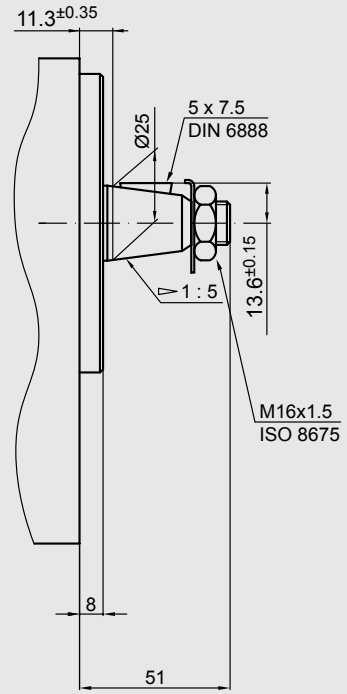

relevant mounting flange: **V**

B Tapered keyed shaft 1:8

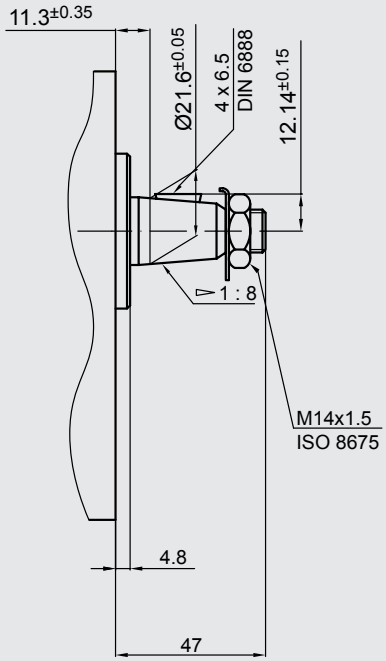

relevant mounting flange: **S**

F Splined shaft SAE B - J 744 22-4 13T

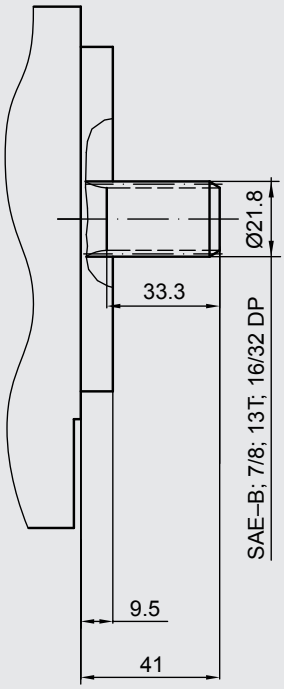

relevant mounting flange: **X**

6.5.15 Mounting flange for front pump size 1

L 2-hole mounting centering Ø 32 mm

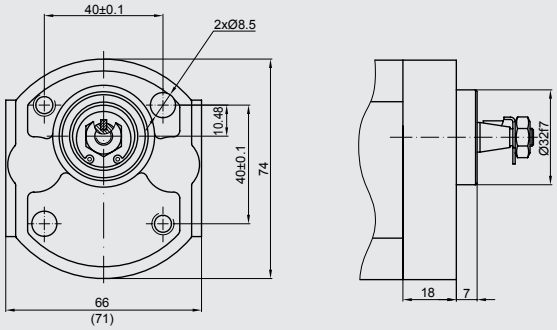

Q Square flange centering Ø 25.4 mm

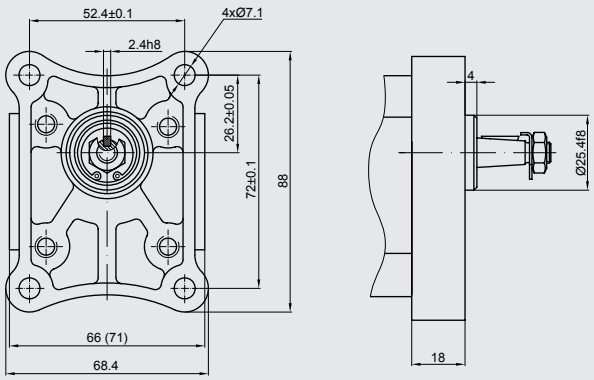

6.5.16 Mounting flange for front pump size 2

N 2-hole mounting
centering Ø 50 mm

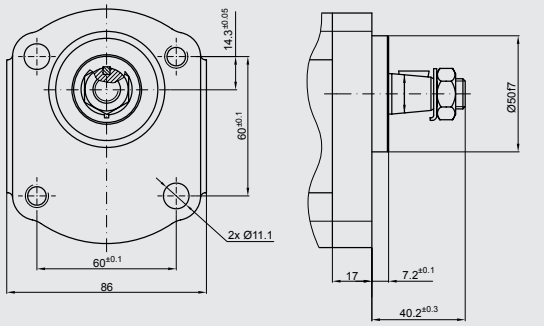

R Square flange
centering Ø 36.5 mm

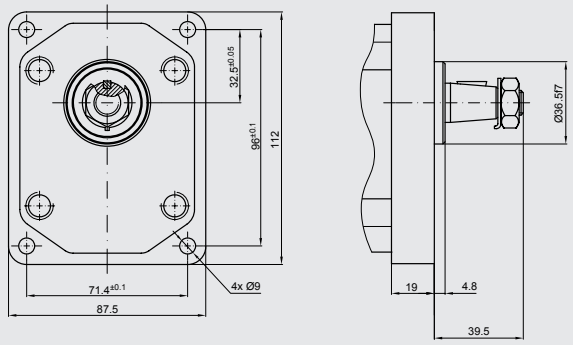

T Square flange
centering Ø 80 mm

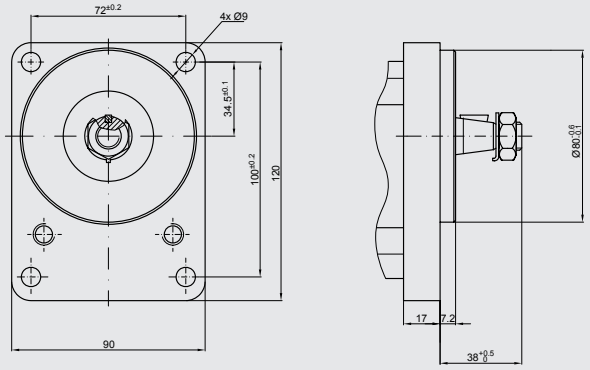

W SAE J 744 82-2 A
Ø 82.55 mm

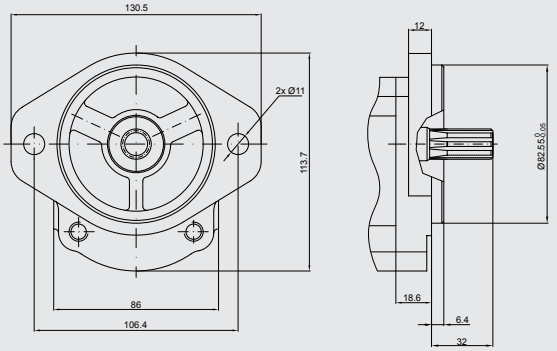

6.5.17 Mounting flange for front pump size 3

S Square flange
centering Ø 50.8 mm

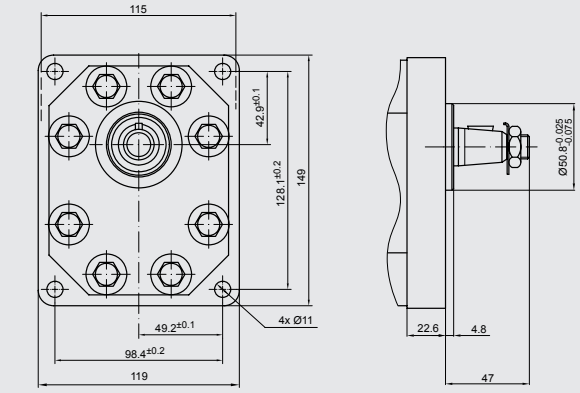

V Square flange
centering Ø 105 mm

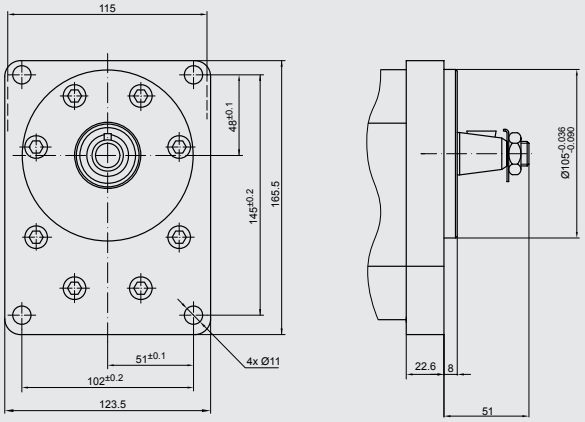

X SAE J 744 101-2 B
Ø 101.6 mm

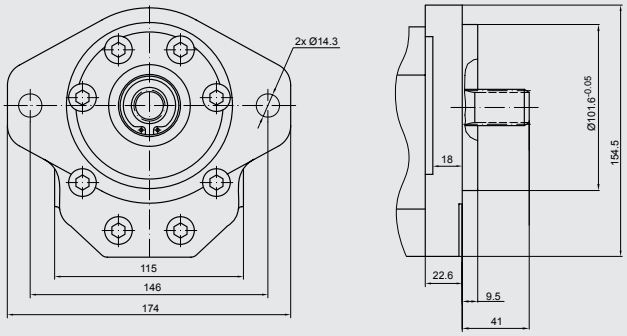

1 Pipe thread
ISO 228/1

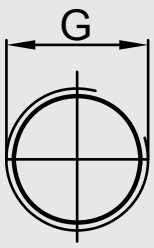

Ordering code	Size	Displacement	Outlet G	Inlet G
1	1	1 ... 2.5 cm³	G 3/8	G 3/8
		3.15 ... 7.4 cm³	G 3/8	G 1/2
	2	4.5 ... 8.2 cm³	G 1/2	G 1/2
		10 ... 25 cm³	G 1/2	G 3/4
	3	20 ... 28 cm³	G 3/4	G 3/4
		32 ... 60 cm³	G 3/4	G1

2 Metric thread
DIN 3852-1

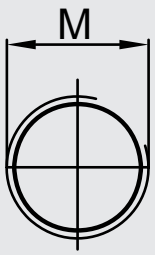

Ordering code	Size	Displacement	Outlet M	Inlet M
2	1	1 ... 2.5 cm³	M16x1.5	M16x1.5
		3.15 ... 6.1 cm³	M16x1.5	M20x1.5
		7.4 cm³	M18x1.5	M22x1.5
	2	4.5 ... 25 cm³	M16x1.5	M20x1.5

3 Pipe thread
UN 2B SAE
O-ring boss

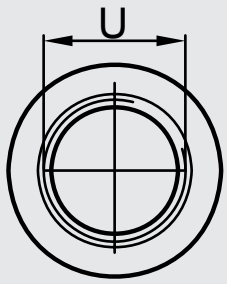

Ordering code	Size	Displacement	Outlet U	Inlet U
3	1	1 ... 6.1 cm³	9/16-18 UNF	3/4-16 UNF
		7.4 cm³	3/4-16 UNF	7/8-14 UNF
	2	4.5 ... 25 cm³	7/8-14 UNF	1 1/16-12 UN

4 Square flange
(Italian design)

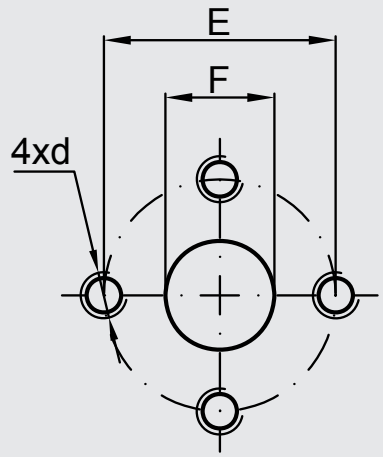

Ordering code	Size	Displacement	Outlet			Inlet		
			F	E	d	F	E	d
4	1	1 ... 7.4 cm³	12	30	M6	12	30	M6
	2	4.5 ... 8.2 cm³	13.1	30	M6	13.1	30	M6
		10 ... 22 cm³	14.2	30	M6	19	40	M8
		25 cm³	19	40	M8	19	40	M8
	3	20 ... 28 cm³	19	40	M8	19	40	M8
		32 ... 60 cm³	19	40	M8	27	51	M10

5 Square flange DIN 3901/ ISO 8435

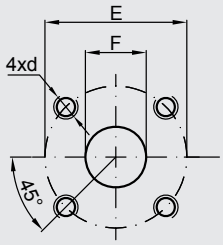

Ordering code	Size	Displacement	Outlet			Inlet		
			F	E	d	F	E	d
5	1	1 ... 7.4 cm³	12	30	M6	12	30	M6
	2	4.5 ... 6.3 cm³	15	35	M6	15	40	M6
		8.2 ... 25 cm³	15	35	M6	20	40	M6
	3	20 ... 28 cm³	19	40	M8	19	40	M8
		32 ... 60 cm³	19	55	M8	27	55	M8

7 SAE flange with metric threads

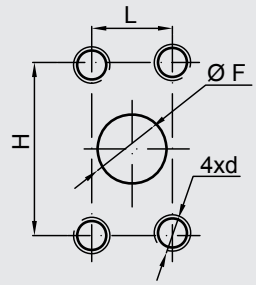

Ordering code	Size	Displacement	Outlet				Inlet			
			F	H	L	d	F	H	L	d
7	3	20 ... 28 cm³	19	47.6	22.2	M10	19	47.6	22.2	M10
		32 ... 60 cm³	19	47.6	22.2	M10	27	52.4	26.2	M10

8 SAE flange with UNC threads

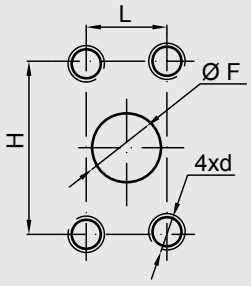

Ordering code	Size	Displacement	Outlet				Inlet			
			F	H	L	d	F	H	L	d
8	3	20 ... 28 cm³	19	47.6	22.2	3/8 - 16 UNC	19	47.6	22.2	3/8 - 16 UNC
		32 ... 60 cm³	19	47.6	22.2		27	52.4	26.2	

6.5.19 Double pump size 1

PGE104-.../...-.BQ4/4-N

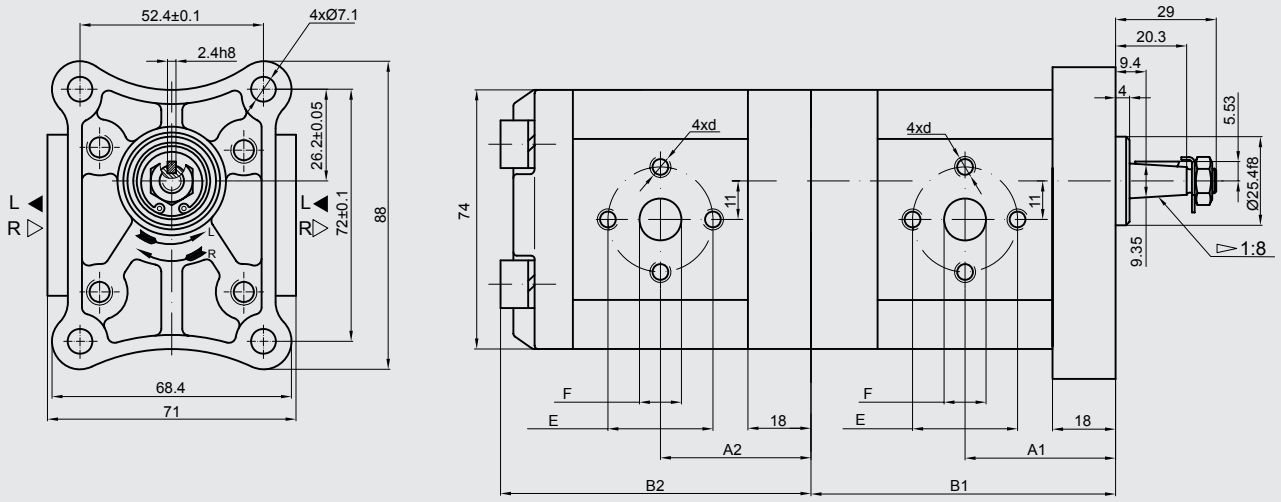

Displacement	Geometric displacement	Flow		Pressure Rated	Max. speed
		at 1500 rpm	at max. rpm		n
	[cm³/rev]	[l/min]	[l/min]	[bar]	[rpm]
100	1	1.40	3.26	250	3500
125	1.25	1.74	4.07		
160	1.6	2.23	5.21		
200	2	2.82	6.58		
250	2.5	3.53	8.23		
315	3.15	4.44	10.36		
365	3.65	5.15	12.01		
420	4.2	5.92	13.82		
500	5	7.05	16.45		3000
610	6.1	8.69	14.49	200	2500
740	7.4	10.55	17.58	170	

Displacement	Dimensions									
	A1	B1	A2	B2	Inlet			Outlet		
	[mm]	[mm]	[mm]	[mm]	E	F	d	E	F	d
100	39.1	79.1	39.1	79	30	12	M6	30	12	M6
125	39.5	80.1	39.5	80						
160	40.3	81.5	40.3	81.6						
200	41.1	83.2	41.1	83.2						
250	42.1	85.2	42.1	85.2						
315	43.5	87.8	43.5	87.8						
365	44.4	89.8	44.4	89.9						
420	45.5	92	45.5	92.1						
500	47.1	95.2	47.1	95.2						
610	49.4	99.8	49.4	99.8						
740	52.1	105.2	52.1	105.2						

PGE104-.../...-.BQ1/1-N

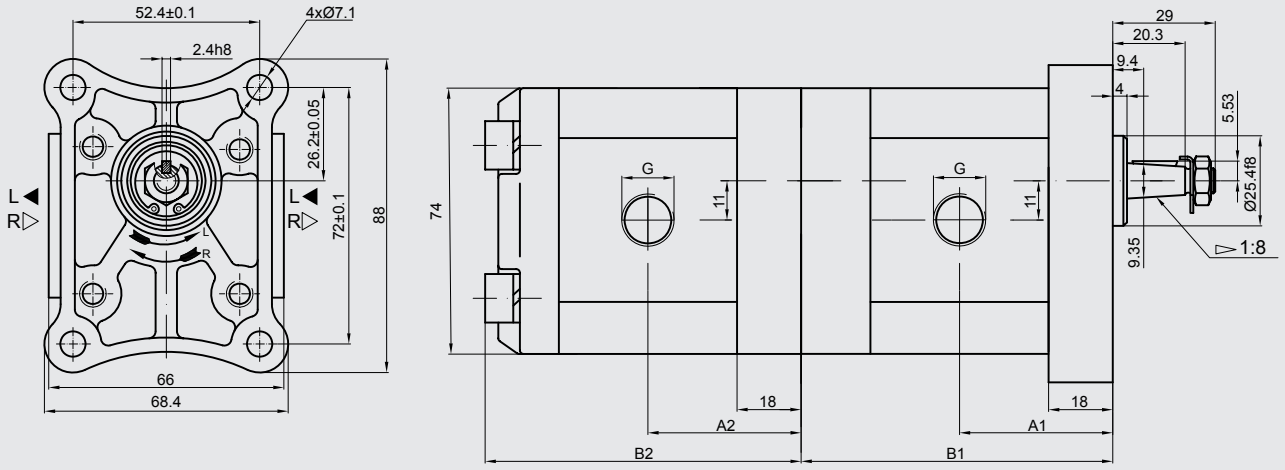

Displacement	Geometric displacement [cm³/rev]	Flow at 1500 rpm [l/min]	Flow at max. rpm [l/min]	Pressure Rated [bar]	Max. speed n [rpm]
100	1	1.40	3.26	250	3500
125	1.25	1.74	4.07		
160	1.6	2.23	5.21		
200	2	2.82	6.58		
250	2.5	3.53	8.23		
315	3.15	4.44	10.36		
365	3.65	5.15	12.01		
420	4.2	5.92	13.82		
500	5	7.05	14.10		3000
610	6.1	8.69	14.49	200	2500
740	7.4	10.55	17.58	170	

Displacement	Dimensions A1 [mm]	B1 [mm]	A2 [mm]	B2 [mm]	Inlet G	Outlet G
100	39.1	79.1	39.1	79	G 3/8	G 3/8
125	39.5	80.1	39.5	80		
160	40.3	81.5	40.3	81.6		
200	41.1	83.2	41.1	83.2		
250	42.1	85.2	42.1	85.2		
315	43.5	87.8	43.5	87.8	G 1/2	
365	44.4	89.8	44.4	89.9		
420	45.5	92	45.5	92.1		
500	47.1	95.2	47.1	95.2		
610	49.4	99.8	49.4	99.8		
740	52.1	105.2	52.1	105.2		

6.5.20 Triple pump size 1

PGE104-.../.../...-.BQ4/4/4-N

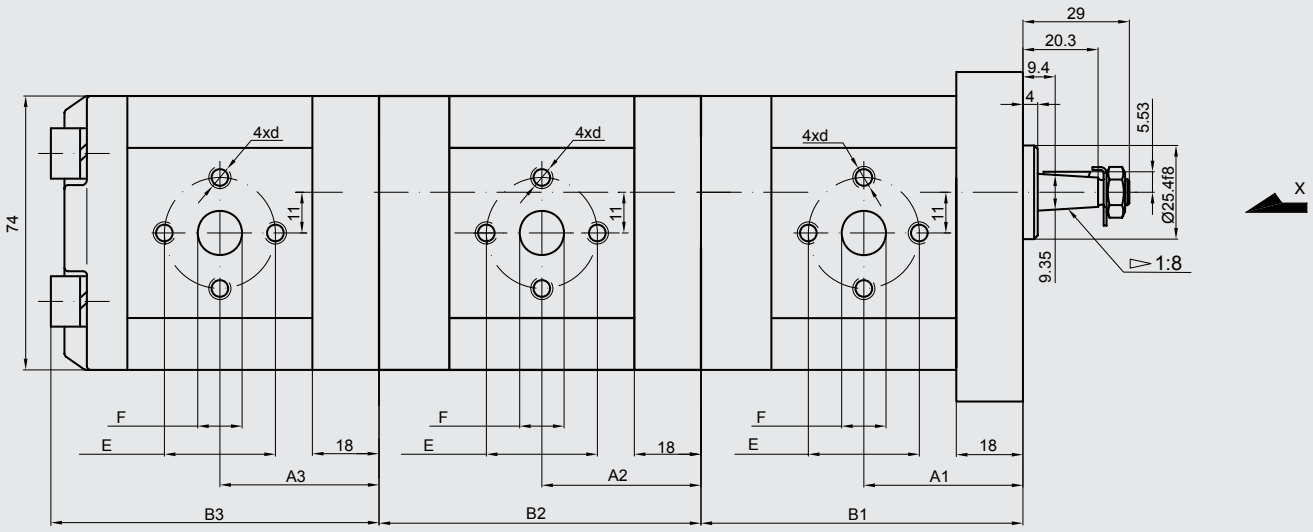

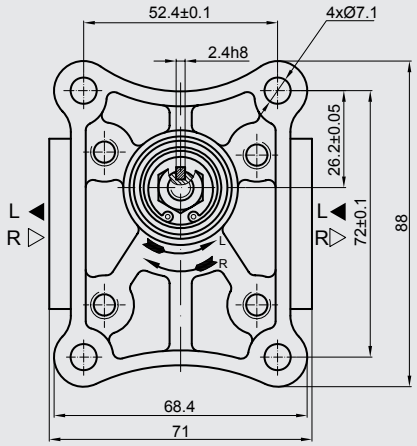

View X

Displacement	Geometric displacement	Flow		Pressure Rated	Max. speed
	[cm³/rev]	at 1500 rpm [l/min]	at max. rpm [l/min]	[bar]	n [rpm]
100	1	1.40	3.26	250	3500
125	1.25	1.74	4.07		
160	1.6	2.23	5.21		
200	2	2.82	6.58		
250	2.5	3.53	8.23		
315	3.15	4.44	10.36		
365	3.65	5.15	12.01		
420	4.2	5.92	13.82		
500	5	7.05	16.45		3000
610	6.1	8.69	14.49	200	2500
740	7.4	10.55	17.58	170	

Displacement	Dimensions											
	A1 [mm]	B1 [mm]	A2 [mm]	B2 [mm]	A3 [mm]	B3 [mm]	Inlet E	Inlet F	Inlet d	Outlet E	Outlet F	Outlet d
100	39.1	79.1	39.1	79	39.1	79	30	12	M6	30	12	M6
125	39.5	80.1	39.5	80	39.5	80						
160	40.3	81.5	40.3	81.6	40.3	81.6						
200	41.1	83.2	41.1	83.2	41.1	83.2						
250	42.1	85.2	42.1	85.2	42.1	85.2						
315	43.5	87.8	43.5	87.8	43.5	87.8						
365	44.4	89.8	44.4	89.9	44.4	89.9						
420	45.5	92	45.5	92.1	45.5	92.1						
500	47.1	95.2	47.1	95.2	47.1	95.2						
610	49.4	99.8	49.4	99.8	49.4	99.8						
740	52.1	105.2	52.1	105.2	52.1	105.2						

PGE104-.../.../...-.BQ1/1/1-N

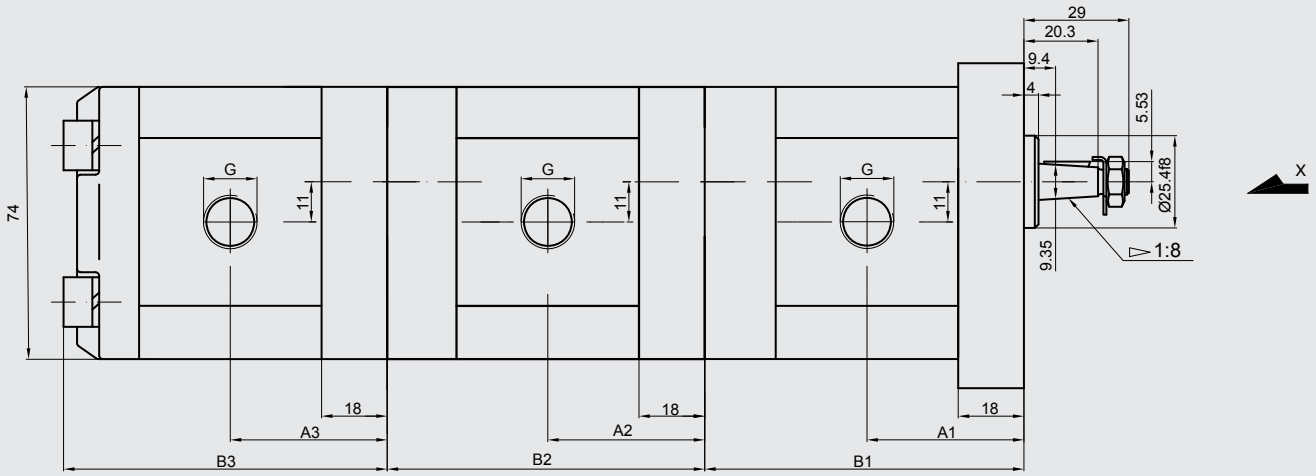

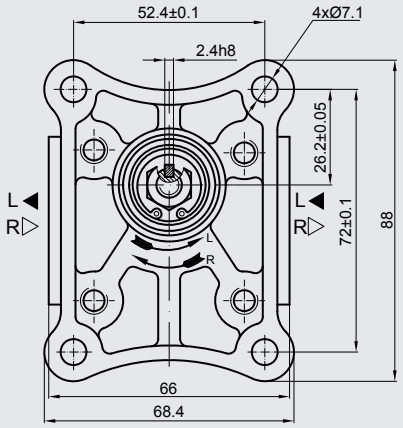

View X

Displacement	Geometric displacement [cm³/rev]	Flow at 1500 rpm [l/min]	Flow at max. rpm [l/min]	Pressure Rated [bar]	Max. speed n [rpm]
100	1	1.40	3.26	250	3500
125	1.25	1.74	4.07		
160	1.6	2.23	5.21		
200	2	2.82	6.58		
250	2.5	3.53	8.23		
315	3.15	4.44	10.36		
365	3.65	5.15	12.01		
420	4.2	5.92	13.82		
500	5	7.05	14.10		3000
610	6.1	8.69	14.49	200	2500
740	7.4	10.55	17.58	170	

Displacement	Dimensions A1 [mm]	B1 [mm]	A2 [mm]	B2 [mm]	A3 [mm]	B3 [mm]	Inlet G	Outlet G
100	39.1	79.1	39.1	79	39.1	79	G 3/8	G 3/8
125	39.5	80.1	39.5	80	39.5	80		
160	40.3	81.5	40.3	81.6	40.3	81.6		
200	41.1	83.2	41.1	83.2	41.1	83.2		
250	42.1	85.2	42.1	85.2	42.1	85.2		
315	43.5	87.8	43.5	87.8	43.5	87.8	G 1/2	
365	44.4	89.8	44.4	89.9	44.4	89.9		
420	45.5	92	45.5	92.1	45.5	92.1		
500	47.1	95.2	47.1	95.2	47.1	95.2		
610	49.4	99.8	49.4	99.8	49.4	99.8		
740	52.1	105.2	52.1	105.2	52.1	105.2		

6.5.21 Double pump size 2

PGE104-.../...-.BR4/4-N

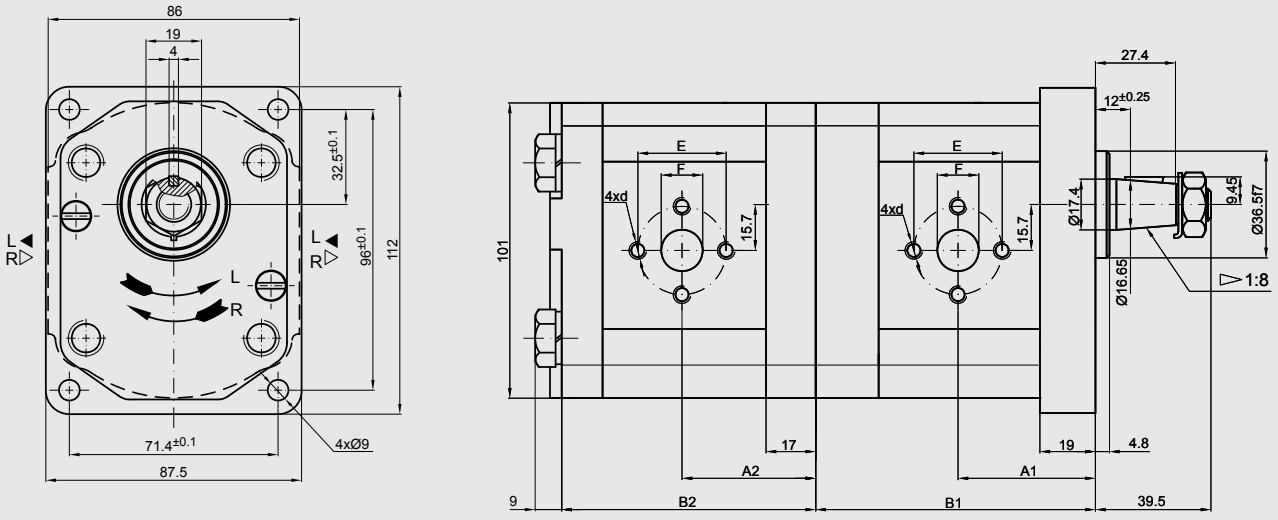

Displacement	Geometric displacement	Flow		Pressure Rated	Max. speed
		at 1500 rpm	at max. rpm		n
	[cm³/rev]	[l/min]	[l/min]	[bar]	[rpm]
450	4.5	6.14	14.33	250	3500
630	6.3	8.69	20.29		
820	8.2	11.32	26.40		
1000	10	13.95	32.55		
1130	11.3	15.76	36.78		
1200	12	16.92	39.48		
1400	14	19.95	46.55		
1500	15	21.60	36.00		2500
1600	16	23.04	38.40		
1900	19	27.36	45.60	200	
2200	22	31.68	42.24	180	2000
2500	25	36.00	48.00	160	

Displacement	Dimensions									
	A1	B1	A2	B2	Inlet			Outlet		
	[mm]	[mm]	[mm]	[mm]	E	F	d	E	F	d
450	42.5	87.2	40.5	78	30	13.1	M6	30	13.1	M6
630	44	90.2	42	81						
820	45.5	93.1	43.5	83.9						
1000	47	96.2	45	87	40	19	M8		14.2	
1130	48	98.2	46	89.1						
1200	48.6	99.5	46.6	90.3						
1400	50	102.6	48	93.4						
1500	51	104.1	49	95						
1600	52	105.8	50	96.6						
1900	54	110.7	52	101.5						
2200	57	115.7	55	106.5						
2500	59.2	120.6	57.2	111.4				40	19	M8

PGE104-.../...-.BR1/1-N

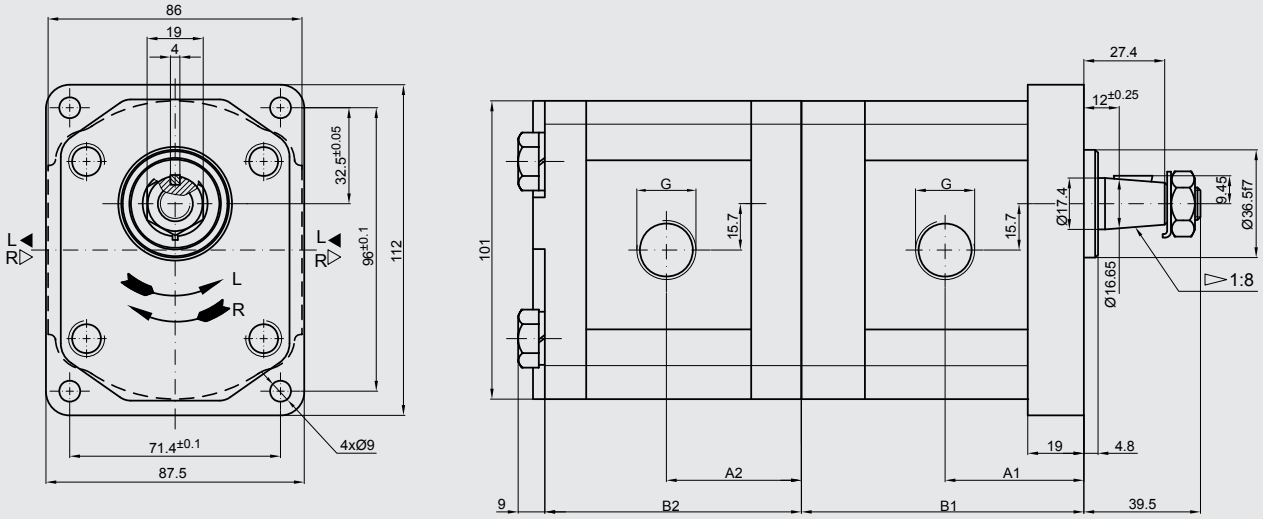

Displacement	Geometric displacement	Flow		Pressure Rated	Max. speed
		at 1500 rpm	at max. rpm		n
	[cm³/rev]	[l/min]	[l/min]	[bar]	[rpm]
450	4.5	6.14	14.33	250	3500
630	6.3	8.69	20.29		
820	8.2	11.32	26.40		
1000	10	13.95	32.55		
1130	11.3	15.76	36.78		
1200	12	16.92	39.48		
1400	14	19.95	46.55		
1500	15	21.60	36.00		2500
1600	16	23.04	38.40		
1900	19	27.36	45.60	200	
2200	22	31.68	42.24	180	2000
2500	25	36.00	48.00	160	

Displacement	Dimensions					
	A1	B1	A2	B2	Inlet	Outlet
	[mm]	[mm]	[mm]	[mm]	G	G
450	42.5	87.2	40.5	78	G 1/2	G 1/2
630	44	90.2	42	81		
820	45.5	93.1	43.5	83.9		
1000	47	96.2	45	87	G 3/4	
1130	48	98.2	46	89		
1200	48.6	99.5	46.5	90.3		
1400	50	102.6	48	93.4		
1500	51	104.1	49	95		
1600	52	105.8	50	96.5		
1900	54	110.7	52	101.5		
2200	57	115.7	55	106.5		
2500	59.2	120.6	57.2	111.4		

PGE104-.../...-.AT5/5-N

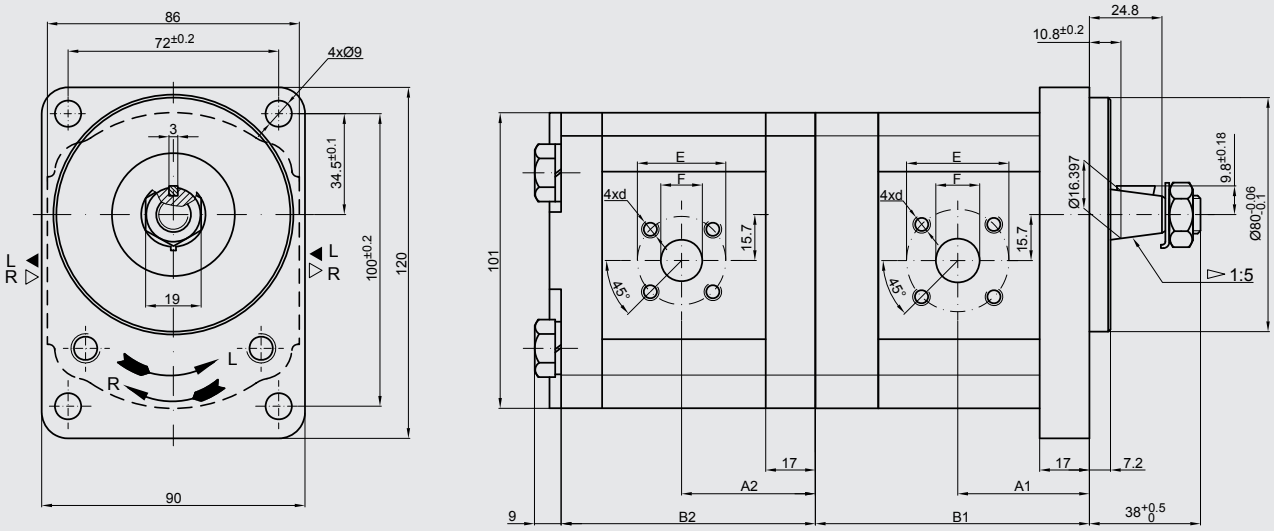

Displacement	Geometric displacement	Flow		Pressure Rated	Max. speed
		at 1500 rpm	at max. rpm		n
	[cm³/rev]	[l/min]	[l/min]	[bar]	[rpm]
450	4.5	6.14	14.33	250	3500
630	6.3	8.69	20.29		
820	8.2	11.32	26.40		
1000	10	13.95	32.55		
1130	11.3	15.76	36.78		
1200	12	16.92	39.48		
1400	14	19.95	46.55		
1500	15	21.60	36.00		2500
1600	16	23.04	38.40		
1900	19	27.36	45.60	200	
2200	22	31.68	42.24	180	2000
2500	25	36.00	48.00	160	

Displacement	Dimensions									
	A1	B1	A2	B2	Inlet			Outlet		
	[mm]	[mm]	[mm]	[mm]	E	F	d	E	F	d
450	39.8	85.2	37.3	78	40	15	M6	35	15	M6
630	41	88.2	38.6	81						
820	43.1	91.1	40.6	83.9		20				
1000	47.5	94.1	45	87						
1130	47.5	96.2	45	89						
1200	47.5	97.5	45	90.3						
1400	47.5	100.6	45	93.4						
1500	47.5	102.1	45	95						
1600	47.5	103.8	45	96.5						
1900	47.5	108.7	45	101.5						
2200	55	113.7	52.5	106.5						
2500	57.2	118.5	57.2	111.4						

PGE104-.../...-.EW4/4-N

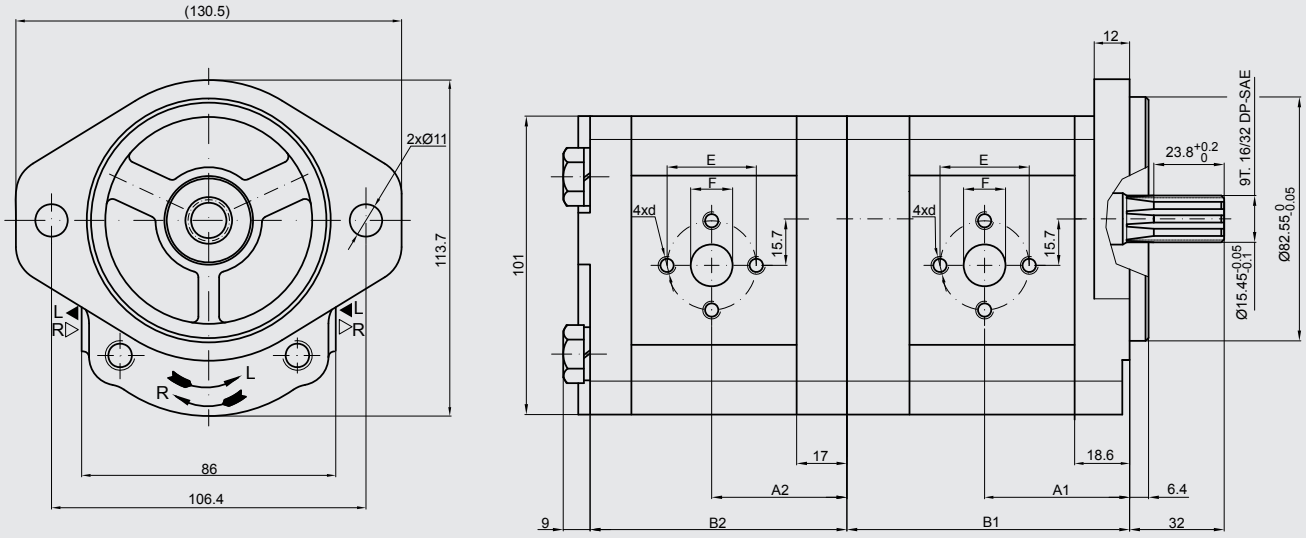

Displacement	Geometric displacement	Flow		Pressure Rated	Max. speed
	[cm³/rev]	at 1500 rpm [l/min]	at max. rpm [l/min]	[bar]	n [rpm]
450	4.5	6.14	14.33	250	3500
630	6.3	8.69	20.29		
820	8.2	11.32	26.40		
1000	10	13.95	32.55		
1130	11.3	15.76	36.78		
1200	12	16.92	39.48		
1400	14	19.95	46.55		
1500	15	21.60	36.00		2500
1600	16	23.04	38.40		
1900	19	27.36	45.60	200	
2200	22	31.68	42.24	180	2000
2500	25	36.00	48.00	160	

Displacement	Dimensions									
	A1 [mm]	B1 [mm]	A2 [mm]	B2 [mm]	Inlet E	Inlet F	Inlet d	Outlet E	Outlet F	Outlet d
450	42.1	86.8	40.5	78	30	13.1	M6	30	13.1	M6
630	43.6	89.8	42	81						
820	45.1	92.7	43.5	83.9						
1000	46.6	95.7	45	87	40	19	M8		14.2	
1130	47.6	97.8	46	89.1						
1200	48.2	99.1	46.6	90.3						
1400	49.6	102.1	48	93.4						
1500	50.6	103.7	49	95						
1600	51.6	105.3	50	96.6						
1900	53.6	110.3	52	101.5						
2200	56.6	115.3	55	106.5						
2500	58.8	120.2	57.2	111.4				40	19	M8

PGE104-.../...-.EW1/1-N

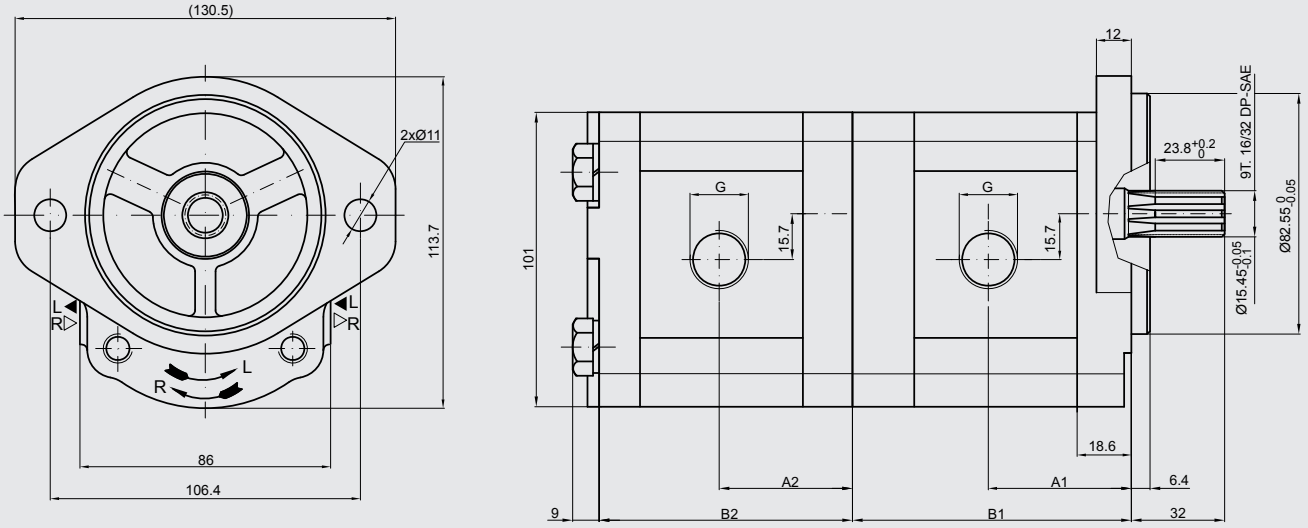

Displacement	Geometric displacement	Flow		Pressure Rated	Max. speed
		at 1500 rpm	at max. rpm		n
	[cm³/rev]	[l/min]	[l/min]	[bar]	[rpm]
450	4.5	6.14	14.33	250	3500
630	6.3	8.69	20.29		
820	8.2	11.32	26.40		
1000	10	13.95	32.55		
1130	11.3	15.76	36.78		
1200	12	16.92	39.48		
1400	14	19.95	46.55		
1500	15	21.60	36.00		2500
1600	16	23.04	38.40		
1900	19	27.36	45.60	200	
2200	22	31.68	42.24	180	2000
2500	25	36.00	48.00	160	

Displacement	Dimensions					
	A1	B1	A2	B2	Inlet	Outlet
	[mm]	[mm]	[mm]	[mm]	G	G
450	42	86.8	40.5	78	G 1/2	G 1/2
630	43.6	86.8	42	81		
820	45	86.8	43.5	83.9		
1000	46.6	95.8	45	87	G 3/4	
1130	47.6	97.9	46	89		
1200	48.2	99.1	46.5	90.3		
1400	49.6	102.1	48	93.4		
1500	50.6	103.7	49	95		
1600	51.6	105.3	50	96.5		
1900	53.6	110.3	52	101.5		
2200	56.6	115.3	55	106.5		
2500	58.8	120.2	57.2	111.4		

6.5.22 Triple pump size 2

PGE104-.../.../...-.BR4/4/4-N

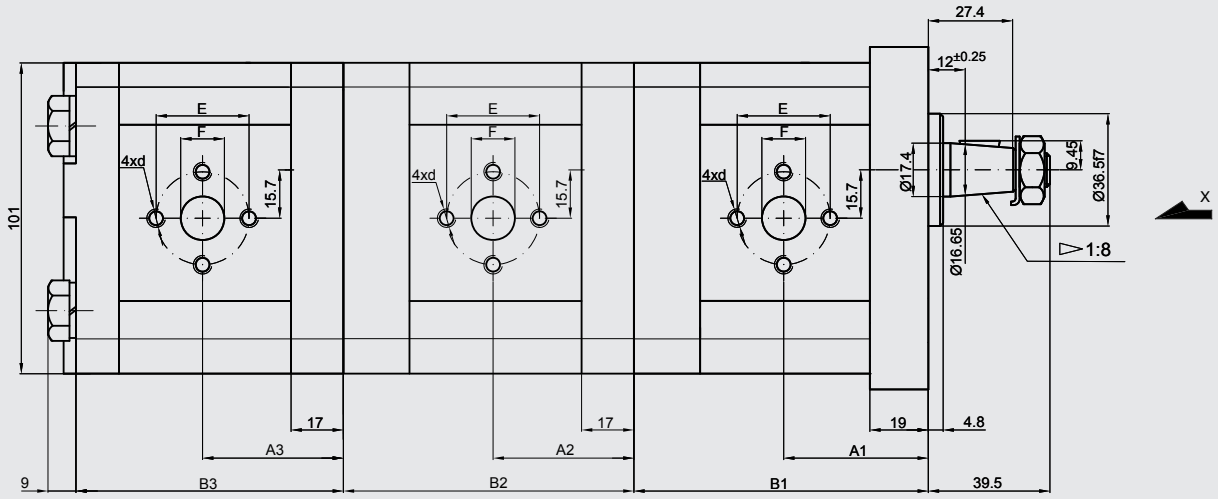

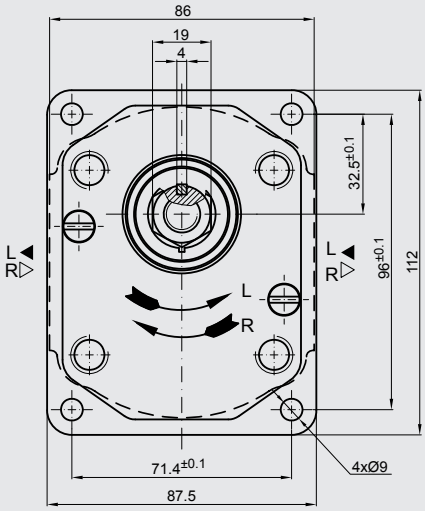

View X

Displacement	Geometric displacement [cm³/rev]	Flow at 1500 rpm [l/min]	Flow at max. rpm [l/min]	Pressure Rated [bar]	Max. speed n [rpm]
450	4.5	6.14	14.33	250	3500
630	6.3	8.69	20.29		
820	8.2	11.32	26.40		
1000	10	13.95	32.55		
1130	11.3	15.76	36.78		
1200	12	16.92	39.48		
1400	14	19.95	46.55		
1500	15	21.60	36.00		2500
1600	16	23.04	38.40		
1900	19	27.36	45.60	200	
2200	22	31.68	42.24	180	2000
2500	25	36.00	48.00	160	

Displacement	Dimensions											
	A1 [mm]	B1 [mm]	A2 [mm]	B2 [mm]	A3 [mm]	B3 [mm]	Inlet E	Inlet F	Inlet d	Outlet E	Outlet F	Outlet d
450	42.5	87.2	40.5	85.2	40.5	78	30	13.1	M6	30	13.1	M6
630	44	90.2	42	88.2	42	81						
820	45.5	93.1	43.5	91.1	43.5	83.9						
1000	47	96.2	45	94.1	45	87	40	19	M8		14.2	
1130	48	98.2	46	96.2	46	89.1						
1200	48.6	99.5	46.6	97.5	46.6	90.3						
1400	50	102.6	48	100.6	48	93.4						
1500	51	104.1	49	102.1	49	95						
1600	52	105.8	50	103.8	50	96.6						
1900	54	110.7	52	108.7	52	101.5						
2200	57	115.7	55	113.7	55	106.5						
2500	59.2	120.6	57.2	118.5	57.2	111.4				40	19	M8

PGE104-.../.../...-.BR1/1/1-N

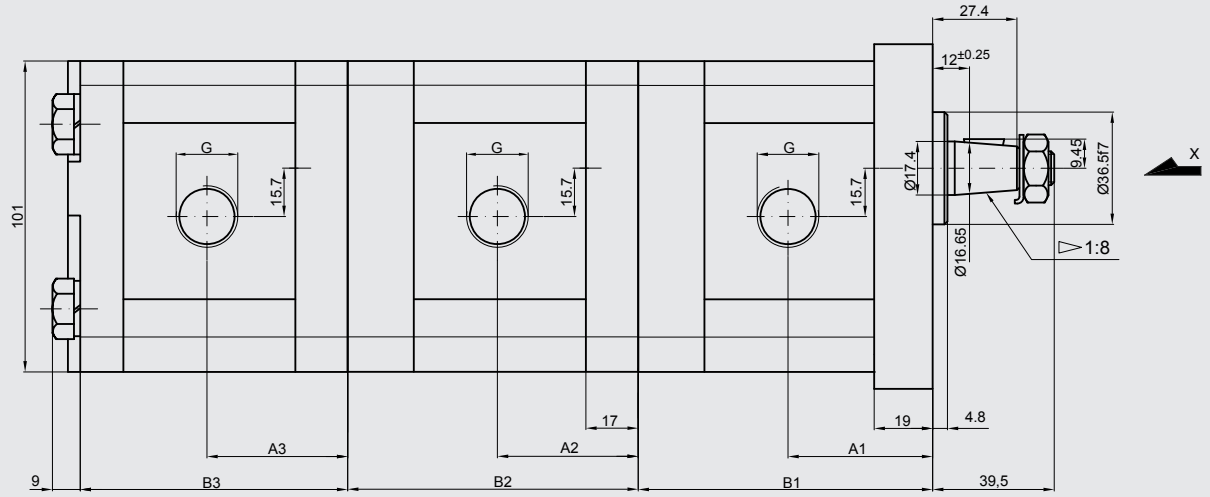

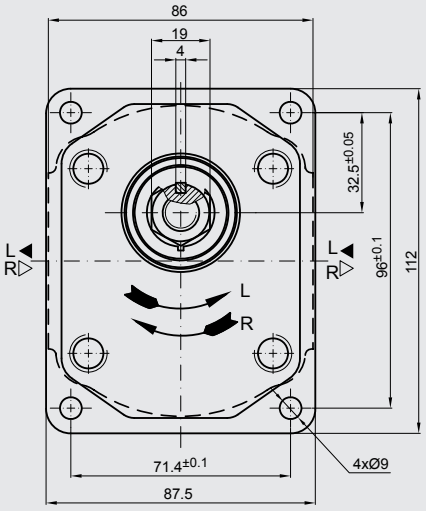

View X

Displacement	Geometric displacement	Flow		Pressure Rated	Max. speed
		at 1500 rpm	at max. rpm		n
	[cm³/rev]	[l/min]	[l/min]	[bar]	[rpm]
450	4.5	6.14	14.33	250	3500
630	6.3	8.69	20.29		
820	8.2	11.32	26.40		
1000	10	13.95	32.55		
1130	11.3	15.76	36.78		
1200	12	16.92	39.48		
1400	14	19.95	46.55		
1500	15	21.60	36.00		2500
1600	16	23.04	38.40		
1900	19	27.36	45.60	200	
2200	22	31.68	42.24	180	2000
2500	25	36.00	48.00	160	

Displacement	Dimensions							
	A1 [mm]	B1 [mm]	A2 [mm]	B2 [mm]	A3 [mm]	B3 [mm]	Inlet G	Outlet G
450	42.5	87.2	40.5	85.2	40.5	78	G 1/2	G 1/2
630	44	90.2	42	88.2	42	81		
820	45.5	93.1	43.5	91.1	43.5	83.9		
1000	47	96.2	45	94.1	45	87	G 3/4	
1130	48	98.2	46	96.2	46	89		
1200	48.6	99.5	46.6	97.5	46.5	90.3		
1400	50	102.6	48	100.6	48	93.4		
1500	51	104.1	49	102.1	49	95		
1600	52	105.8	50	103.8	50	96.6		
1900	54	110.7	52	108.7	52	101.5		
2200	57	115.7	55	113.7	55	106.5		
2500	59.2	120.6	57.2	118.5	57.2	111.4		

PGE104-.../.../...-.AT5/5/5-N

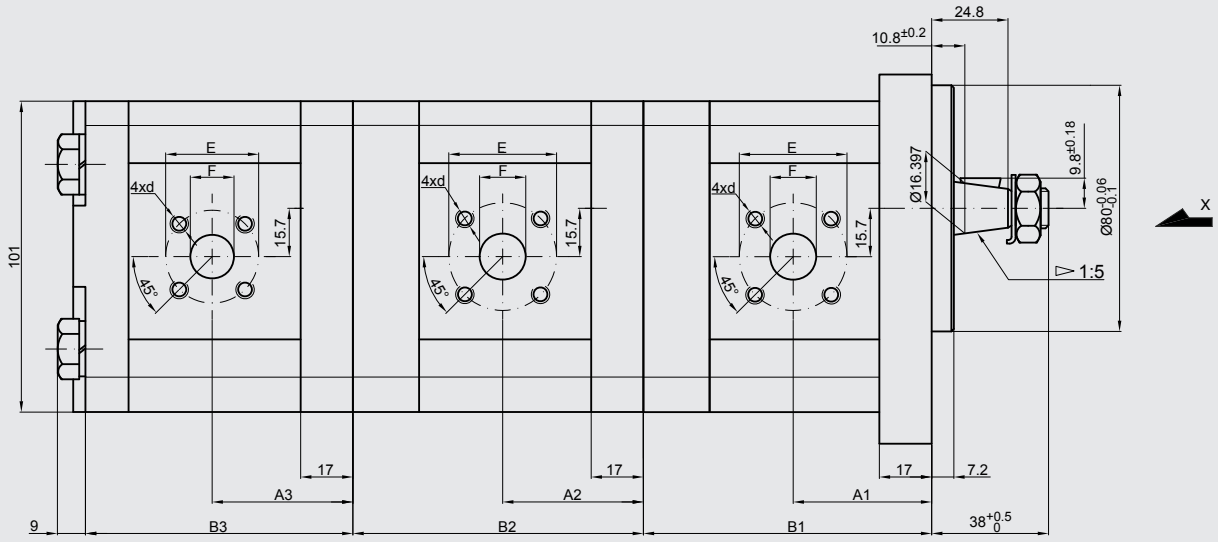

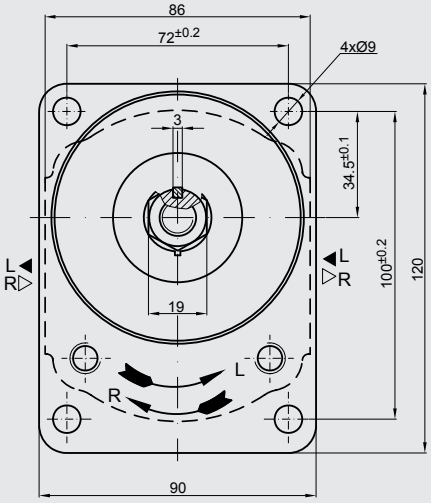

View X

Displacement	Geometric displacement	Flow		Pressure Rated	Max. speed
		at 1500 rpm	at max. rpm		n
	[cm³/rev]	[l/min]	[l/min]	[bar]	[rpm]
450	4.5	6.14	14.33	250	3500
630	6.3	8.69	20.29		
820	8.2	11.32	26.40		
1000	10	13.95	32.55		
1130	11.3	15.76	36.78		
1200	12	16.92	39.48		
1400	14	19.95	46.55		
1500	15	21.60	36.00		2500
1600	16	23.04	38.40		
1900	19	27.36	45.60	200	
2200	22	31.68	42.24	180	2000
2500	25	36.00	48.00	160	

Displacement	Dimensions											
	A1	B1	A2	B2	A3	B3	Inlet			Outlet		
	[mm]	[mm]	[mm]	[mm]	[mm]	[mm]	E	F	d	E	F	d
450	39.8	85.2	40.5	85.2	37.3	78	40	15	M6	35	15	M6
630	41	88.2	42	88.2	38.6	81						
820	43.1	91.1	43.5	91.1	40.6	83.9		20				
1000	47.5	94.1	45	94.1	45	87						
1130	47.5	96.2	46	96.2	45	89						
1200	47.5	97.5	46.6	97.5	45	90.3						
1400	47.5	100.6	48	100.6	45	93.4						
1500	47.5	102.1	49	102.1	45	95						
1600	47.5	103.8	50	103.8	45	96.5						
1900	47.5	108.7	52	108.7	45	101.5						
2200	55	113.7	55	113.7	52.5	106.5						
2500	57.2	118.5	57.2	118.5	57.2	111.4						

6.5.23 Double pump size 2 / size 1

PGE104-.../...-.BR4/4-N

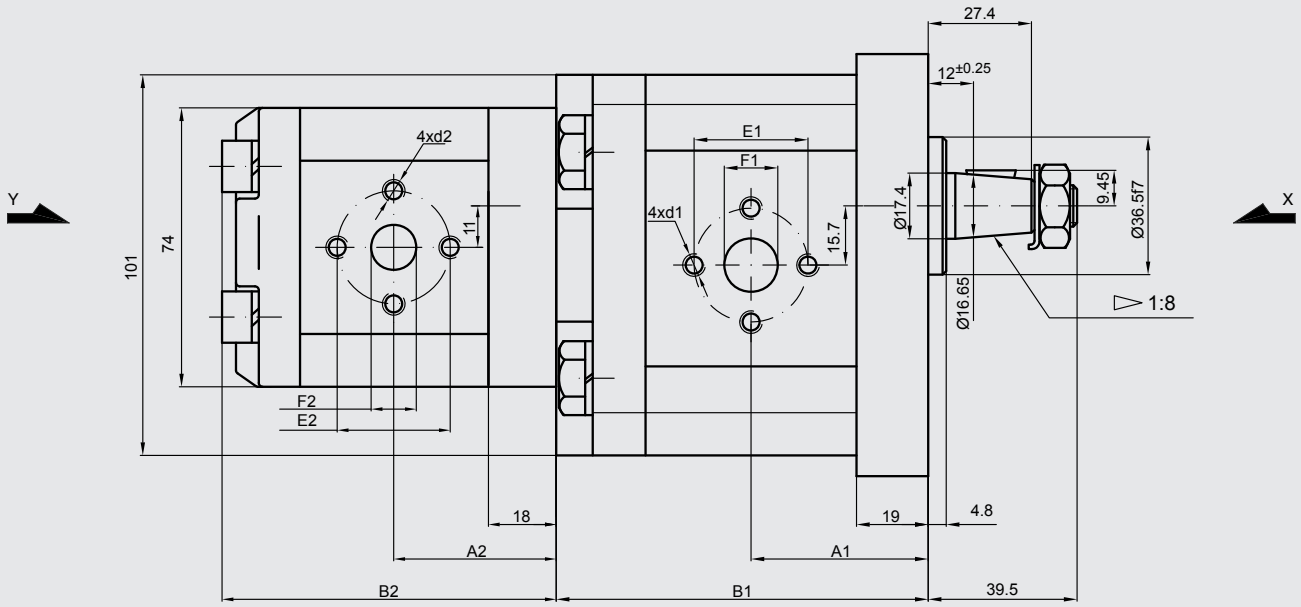

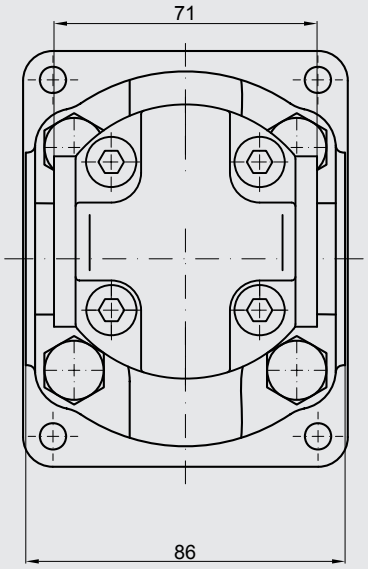

View Y

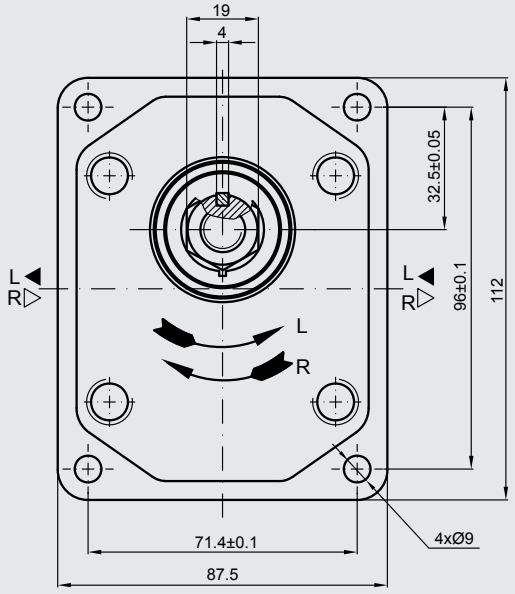

View X

Front pump size 2:

Displacement	Geometric displacement	Flow		Pressure Rated	Max. speed	Dimensions								
								Inlet			Outlet		
	[cm³/rev]	at 1500 rpm [l/min]	at max. rpm [l/min]	[bar]	n [rpm]	A1 [mm]	B1 [mm]	E1	F1	d1	E1	F1	d1
450	4.5	6.14	14.33	250	3500	42.5	89.7	30	13.1	M6	30	13.1	M6
630	6.3	8.69	20.29			44	92.7						
820	8.2	11.32	26.40			45.5	95.6						
1000	10	13.95	32.55			47	98.7	40	19	M8		14.2	
1130	11.3	15.76	36.78			48	100.7						
1200	12	16.92	39.48			48.6	102						
1400	14	19.95	46.55			50	105.1						
1500	15	21.60	36.00		2500	51	106.6						
1600	16	23.04	38.40			52	108.3						
1900	19	27.36	45.60	200		54	113.2						
2200	22	31.68	42.24	180	2000	57	118.2						
2500	25	36.00	48.00	160		59.2	123.1				40	19	M8

End pump size 1:

Displacement	Geometric displacement	Flow		Pressure Rated	Max. speed	Dimensions								
								Inlet			Outlet		
	[cm³/rev]	at 1500 rpm [l/min]	at max. rpm [l/min]	[bar]	n [rpm]	A2 [mm]	B2 [mm]	E2	F2	d2	E2	F2	d2
100	1	1.40	3.26	250	3500	39.1	81	30	12	M6	30	12	M6
125	1.25	1.74	4.07			39.5	82						
160	1.6	2.23	5.21			40.3	83.6						
200	2	2.82	6.58			41.1	85.2						
250	2.5	3.53	8.23			42.1	87.2						
315	3.15	4.44	10.36			43.5	89.8						
365	3.65	5.15	12.01			44.4	91.9						
420	4.2	5.92	13.82			45.5	94.1						
500	5	7.05	14.10		3000	47.1	97.2						
610	6.1	8.69	14.49	200	2500	49.4	101.8						
740	7.4	10.55	17.58	170		52.1	107.2						

PGE104-.../...-.BR1/1-N

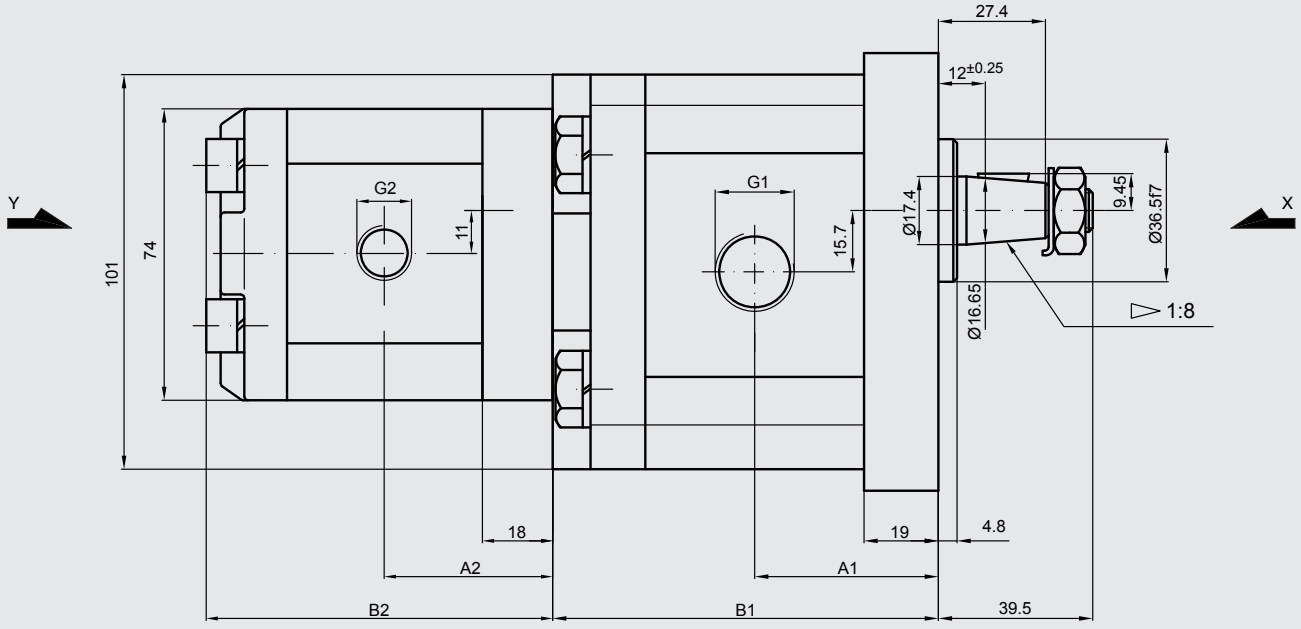

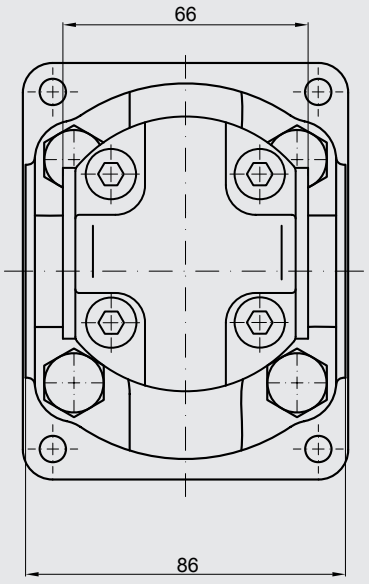

View Y

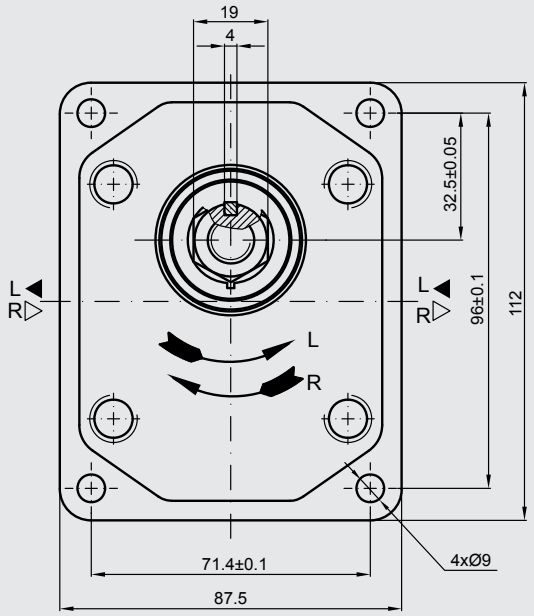

View X

Front pump size 2:

Displace-ment	Geometric displacement	Flow		Pressure Rated	Max. speed	Dimensions			
		at 1500 rpm	at max. rpm		n	A1	B1	Inlet	Outlet
	[cm³/rev]	[l/min]	[l/min]	[bar]	[rpm]	[mm]	[mm]	G1	G1
450	4.5	6.14	14.33	250	3500	42.5	89.7	G 1/2	G 1/2
630	6.3	8.69	20.29			44	92.7		
820	8.2	11.32	26.40			45.5	95.6		
1000	10	13.95	32.55			47	98.7	G 3/4	
1130	11.3	15.76	36.78			48	100.7		
1200	12	16.92	39.48			48.6	102		
1400	14	19.95	46.55			50	105.1		
1500	15	21.60	36.00		2500	51	106.6		
1600	16	23.04	38.40			52	108.3		
1900	19	27.36	45.60	200		54	113.2		
2200	22	31.68	42.24	180	2000	57	118.2		
2500	25	36.00	48.00	160		59.2	123.1		

End pump size 1:

Displace-ment	Geometric displacement	Flow		Pressure Rated	Max. speed	Dimensions			
		at 1500 rpm	at max. rpm		n	A2	B2	Inlet	Outlet
	[cm³/rev]	[l/min]	[l/min]	[bar]	[rpm]	[mm]	[mm]	G2	G2
100	1	1.40	3.26	250	3500	39.1	81	G 3/8	G 3/8
125	1.25	1.74	4.07			39.5	82		
160	1.6	2.23	5.21			40.3	83.6		
200	2	2.82	6.58			41.1	85.2		
250	2.5	3.53	8.23			42.1	87.2		
315	3.15	4.44	10.36			43.5	89.8	G 1/2	
365	3.65	5.15	12.01			44.4	91.9		
420	4.2	5.92	13.82			45.5	94.1		
500	5	7.05	14.10		3000	47.1	97.2		
610	6.1	8.69	14.49	200	2500	49.4	101.8		
740	7.4	10.55	17.58	170		52.1	107.2		

PGE104-.../...-.AT5/5-N

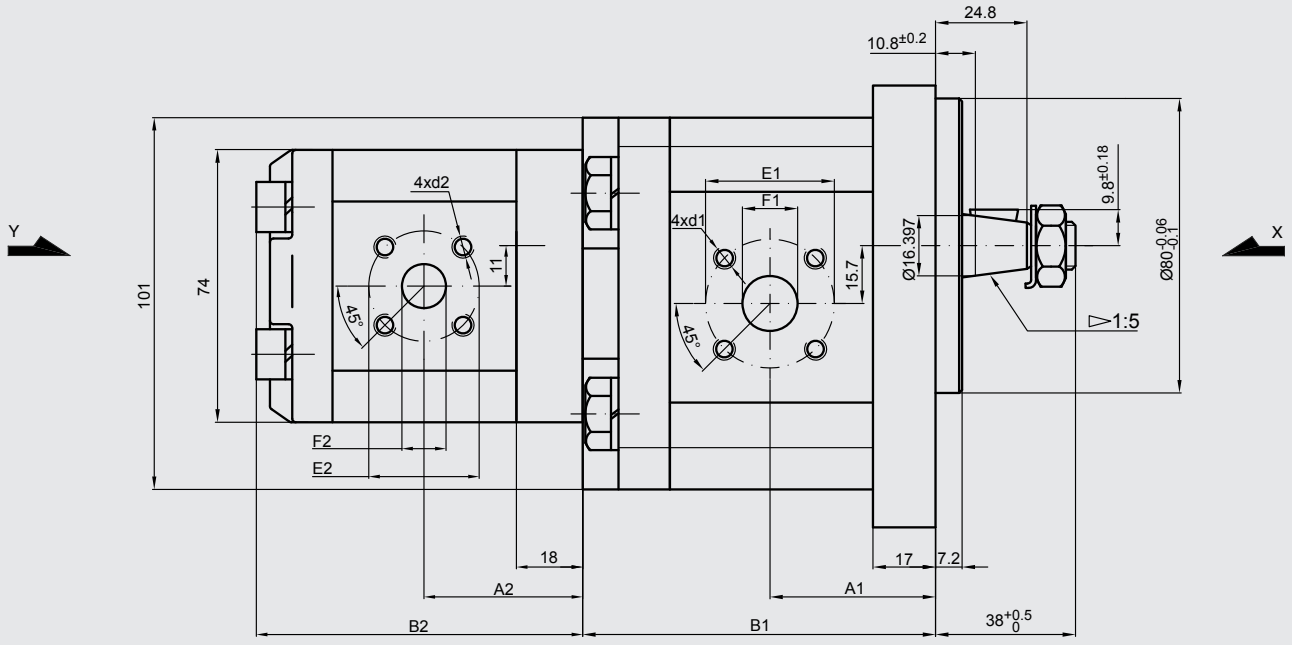

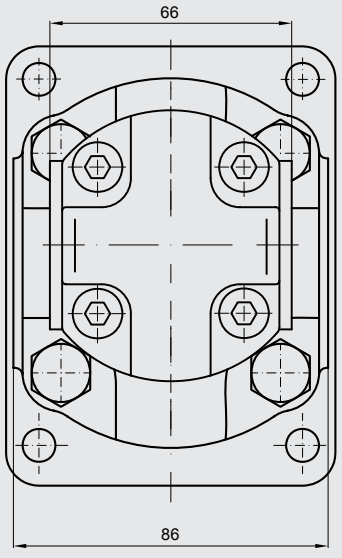

View Y

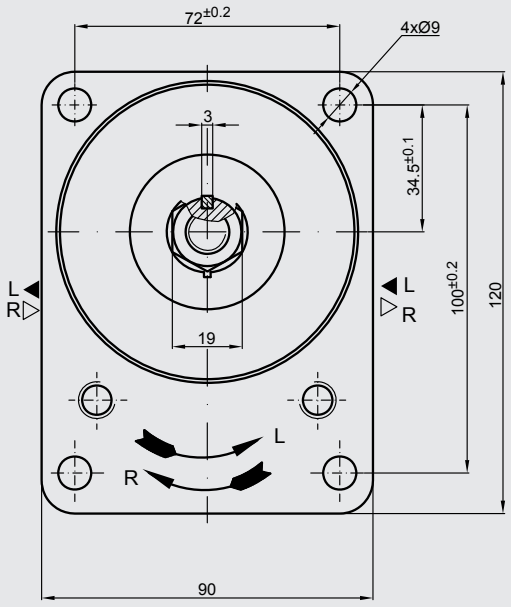

View X

Front pump size 2:

Displacement	Geometric displacement	Flow		Pressure Rated	Max. speed	Dimensions								
		at 1500 rpm	at max. rpm					Inlet			Outlet		
	[cm³/rev]	[l/min]	[l/min]	[bar]	n [rpm]	A1 [mm]	B1 [mm]	E1	F1	d1	E1	F1	d1
450	4.5	6.14	14.33	250	3500	39.8	87.6	40	15	M6	35	15	M6
630	6.3	8.69	20.29			41	90.6						
820	8.2	11.32	26.40			43.1	93.5		20				
1000	10	13.95	32.55			47.5	96.6						
1130	11.3	15.76	36.78			47.5	98.7						
1200	12	16.92	39.48			47.5	99.9						
1400	14	19.95	46.55			47.5	103						
1500	15	21.60	36.00		2500	47.5	104.5						
1600	16	23.04	38.40			47.5	106.2						
1900	19	27.36	45.60	200		47.5	111.1						
2200	22	31.68	42.24	180	2000	55	116.1						
2500	25	36.00	48.00	160		57.5	121.1						

End pump size 1:

Displacement	Geometric displacement	Flow		Pressure Rated	Max. speed	Dimensions								
		at 1500 rpm	at max. rpm					Inlet			Outlet		
	[cm³/rev]	[l/min]	[l/min]	[bar]	n [rpm]	A2 [mm]	B2 [mm]	E2	F2	d2	E2	F2	d2
100	1	1.40	3.26	250	3500	39.1	81	30	12	M6	30	12	M6
125	1.25	1.74	4.07			39.5	82						
160	1.6	2.23	5.21			40.3	83.6						
200	2	2.82	6.58			41.1	85.2						
250	2.5	3.53	8.23			42.1	87.2						
315	3.15	4.44	10.36			43.5	89.8						
365	3.65	5.15	12.01			44.4	91.9						
420	4.2	5.92	13.82			45.5	94.1						
500	5	7.05	14.10		3000	47.1	97.2						
610	6.1	8.69	14.49	200	2500	49.4	101.8						
740	7.4	10.55	17.58	170		52.1	107.2						

6.5.24 Triple pump size 2 / size 2 / size 1

PGE104-.../.../...-.BR4/4/4-N

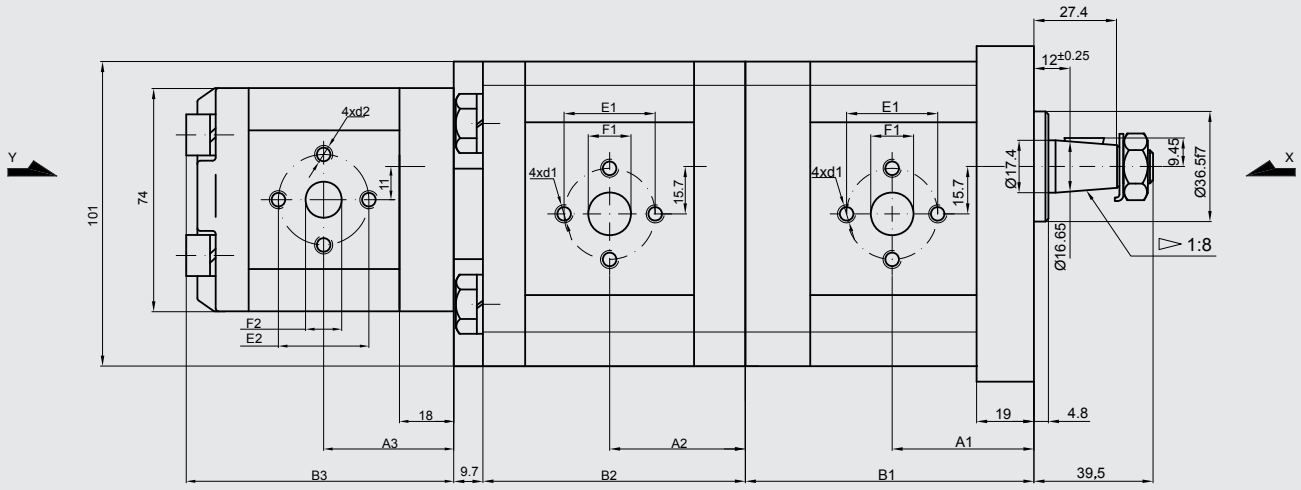

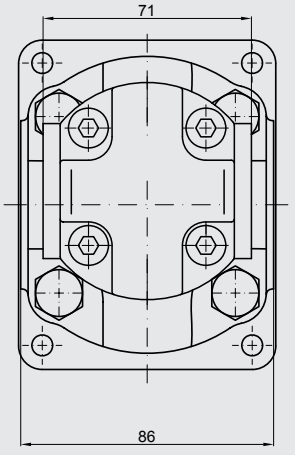

View Y

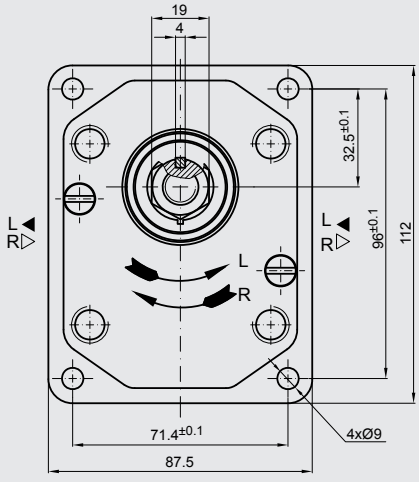

View X

Front and middle pump size 2:

Displacement	Geometric displacement	Flow		Pressure Rated	Max. speed
		at 1500 rpm	at max. rpm		n
	[cm³/rev]	[l/min]	[l/min]	[bar]	[rpm]
450	4.5	6.14	14.33	250	3500
630	6.3	8.69	20.29		
820	8.2	11.32	26.40		
1000	10	13.95	32.55		
1130	11.3	15.76	36.78		
1200	12	16.92	39.48		
1400	14	19.95	46.55		
1500	15	21.60	36.00		2500
1600	16	23.04	38.40		
1900	19	27.36	45.60	200	
2200	22	31.68	42.24	180	2000
2500	25	36.00	48.00	160	

Displacement	Dimensions									
	A1	B1	A2	B2	Inlet			Outlet		
	[mm]	[mm]	[mm]	[mm]	E1	F1	d1	E1	F1	d1
450	42.5	87.2	40.5	78	30	13.1	M6	30	13.1	M6
630	44	90.2	42	81						
820	45.5	93.1	43.5	83.9						
1000	47	96.2	45	87	40	19	M8		14.2	
1130	48	98.2	46	89.1						
1200	48.6	99.5	46.6	90.3						
1400	50	102.6	48	93.4						
1500	51	104.1	49	95						
1600	52	105.8	50	96.6						
1900	54	110.7	52	101.5						
2200	57	115.7	55	106.5						
2500	59.2	120.6	57.2	111.4				40	19	M8

End pump size 1:

Displacement	Geometric displacement	Flow		Pressure Rated	Max. speed	Dimensions							
		at 1500 rpm	at max. rpm		n	A3	B3	Inlet			Outlet		
	[cm³/rev]	[l/min]	[l/min]	[bar]	[rpm]	[mm]	[mm]	E2	F2	d2	E2	F2	d2
100	1	1.40	3.26	250	3500	39.1	81	30	12	M6	30	12	M6
125	1.25	1.74	4.07			39.5	82						
160	1.6	2.23	5.21			40.3	83.6						
200	2	2.82	6.58			41.1	85.2						
250	2.5	3.53	8.23			42.1	87.2						
315	3.15	4.44	10.36			43.5	89.8						
365	3.65	5.15	12.01			44.4	91.9						
420	4.2	5.92	13.82			45.5	94.1						
500	5	7.05	14.10		3000	47.1	97.2						
610	6.1	8.69	14.49	200	2500	49.4	101.8						
740	7.4	10.55	17.58	170		52.1	107.2						

PGE104-.../.../...-.BR1/1/1-N

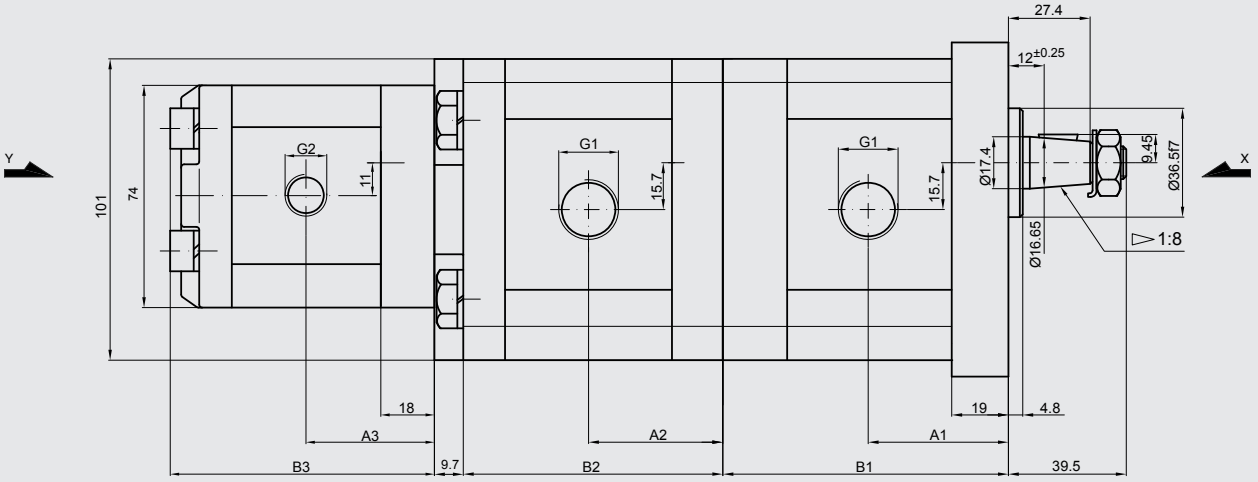

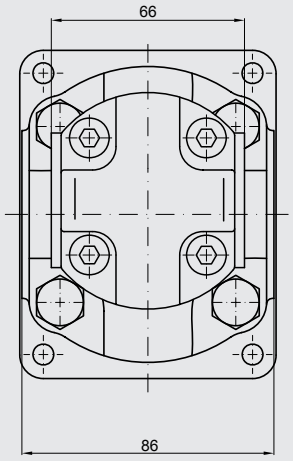

View Y

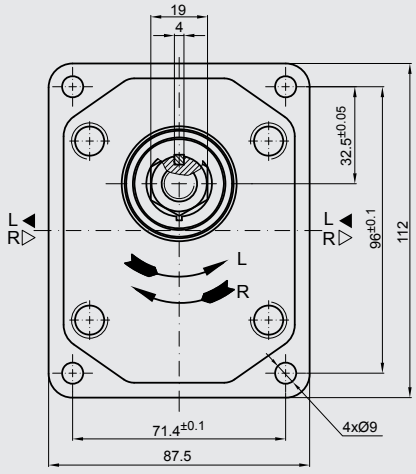

View X

Front and middle pump size 2:

Displacement	Geometric displacement	Flow		Pressure Rated	Max. speed
		at 1500 rpm	at max. rpm		n
	[cm³/rev]	[l/min]	[l/min]	[bar]	[rpm]
450	4.5	6.14	14.33	250	3500
630	6.3	8.69	20.29		
820	8.2	11.32	26.40		
1000	10	13.95	32.55		
1130	11.3	15.76	36.78		
1200	12	16.92	39.48		
1400	14	19.95	46.55		
1500	15	21.60	36.00		2500
1600	16	23.04	38.40		
1900	19	27.36	45.60	200	
2200	22	31.68	42.24	180	2000
2500	25	36.00	48.00	160	

Displacement	Dimensions					
	A1 [mm]	B1 [mm]	A2 [mm]	B2 [mm]	Inlet G1	Outlet G1
450	42.5	87.2	40.5	78	G 1/2	G 1/2
630	44	90.2	42	81		
820	45.5	93.1	43.5	83.9		
1000	47	96.2	45	87	G 3/4	
1130	48	98.2	46	89.1		
1200	48.6	99.5	46.6	90.3		
1400	50	102.6	48	93.4		
1500	51	104.1	49	95		
1600	52	105.8	50	96.6		
1900	54	110.7	52	101.5		
2200	57	115.7	55	106.5		
2500	59.2	120.6	57.2	111.4		

End pump size 1:

Displacement	Geometric displacement	Flow		Pressure Rated	Max. speed	Dimensions			
		at 1500 rpm	at max. rpm		n	A3	B3	Inlet	Outlet
	[cm³/rev]	[l/min]	[l/min]	[bar]	[rpm]	[mm]	[mm]	G2	G2
100	1	1.40	3.26	250	3500	39.1	81	G 3/8	G 3/8
125	1.25	1.74	4.07			39.5	82		
160	1.6	2.23	5.21			40.3	83.6		
200	2	2.82	6.58			41.1	85.2		
250	2.5	3.53	8.23			42.1	87.2		
315	3.15	4.44	10.36			43.5	89.8	G 1/2	
365	3.65	5.15	12.01			44.4	91.9		
420	4.2	5.92	13.82			45.5	94.1		
500	5	7.05	14.10		3000	47.1	97.2		
610	6.1	8.69	14.49	200	2500	49.4	101.8		
740	7.4	10.55	17.58	170		52.1	107.2		

PGE104-.../.../...-.AT5/5/5-N

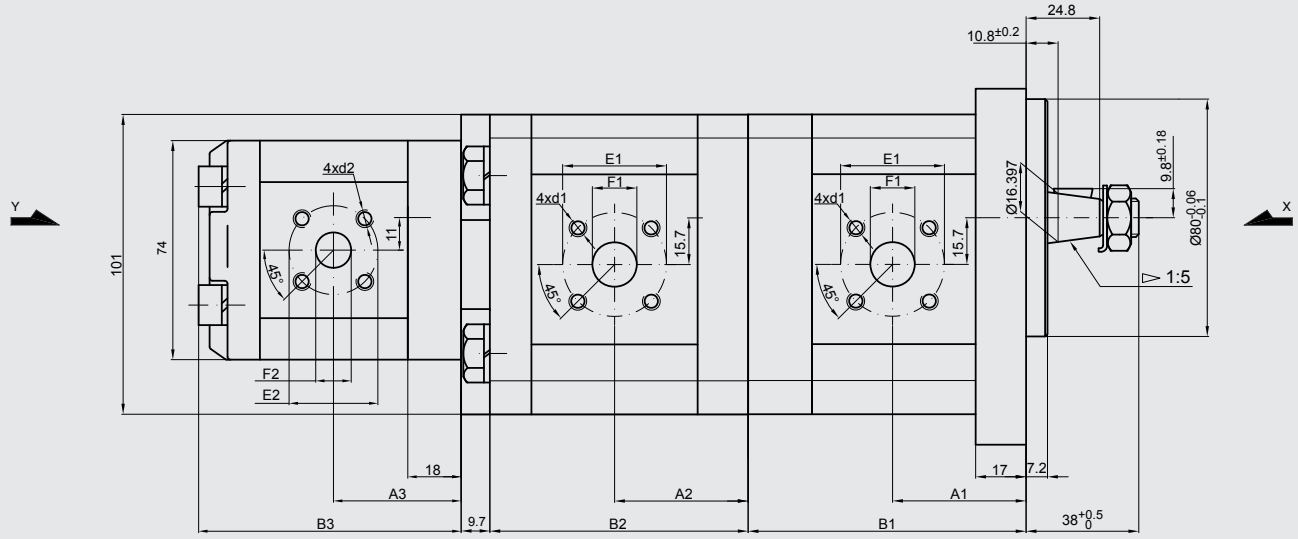

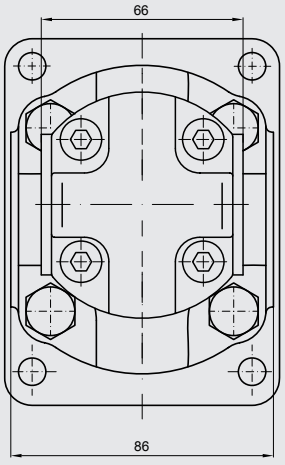

View Y

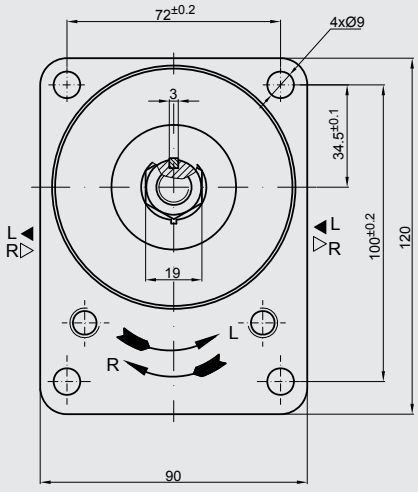

View X

Front and middle pump size 2:

Displacement	Geometric displacement	Flow		Pressure Rated	Max. speed
	[cm³/rev]	at 1500 rpm [l/min]	at max. rpm [l/min]	[bar]	n [rpm]
450	4.5	6.14	14.33	250	3500
630	6.3	8.69	20.29		
820	8.2	11.32	26.40		
1000	10	13.95	32.55		
1130	11.3	15.76	36.78		
1200	12	16.92	39.48		
1400	14	19.95	46.55		
1500	15	21.60	36.00		2500
1600	16	23.04	38.40		
1900	19	27.36	45.60	200	
2200	22	31.68	42.24	180	2000
2500	25	36.00	48.00	160	

Displacement	Dimensions									
	A1 [mm]	B1 [mm]	A2 [mm]	B2 [mm]	Inlet E1	Inlet F1	Inlet d1	Outlet E1	Outlet F1	Outlet d1
450	39.8	85.2	40.5	78	40	15	M6	35	15	M6
630	41	88.2	42	81						
820	43.1	91.1	43.5	83.9		20				
1000	47.5	94.1	45	87						
1130	47.5	96.2	46	89.1						
1200	47.5	97.5	46.6	90.3						
1400	47.5	100.6	48	93.4						
1500	47.5	102.1	49	95						
1600	47.5	103.8	50	96.6						
1900	47.5	108.7	52	101.5						
2200	55	113.7	55	106.5						
2500	57.2	118.5	57.2	111.4						

End pump size 1:

Displacement	Geometric displacement	Flow		Pressure Rated	Max. speed	Dimensions							
								Inlet			Outlet		
	[cm³/rev]	at 1500 rpm [l/min]	at max. rpm [l/min]	[bar]	n [rpm]	A3 [mm]	B3 [mm]	E2	F2	d2	E2	F2	d2
100	1	1.40	3.26	250	3500	39.1	81	30	12	M6	30	12	M6
125	1.25	1.74	4.07			39.5	82						
160	1.6	2.23	5.21			40.3	83.6						
200	2	2.82	6.58			41.1	85.2						
250	2.5	3.53	8.23			42.1	87.2						
315	3.15	4.44	10.36			43.5	89.8						
365	3.65	5.15	12.01			44.4	91.9						
420	4.2	5.92	13.82			45.5	94.1						
500	5	7.05	14.10		3000	47.1	97.2						
610	6.1	8.69	14.49	200	2500	49.4	101.8						
740	7.4	10.55	17.58	170		52.1	107.2						

6.5.25 Triple pump size 2 / size 1 / size 1

PGE104-.../.../...-.BR4/4/4-N

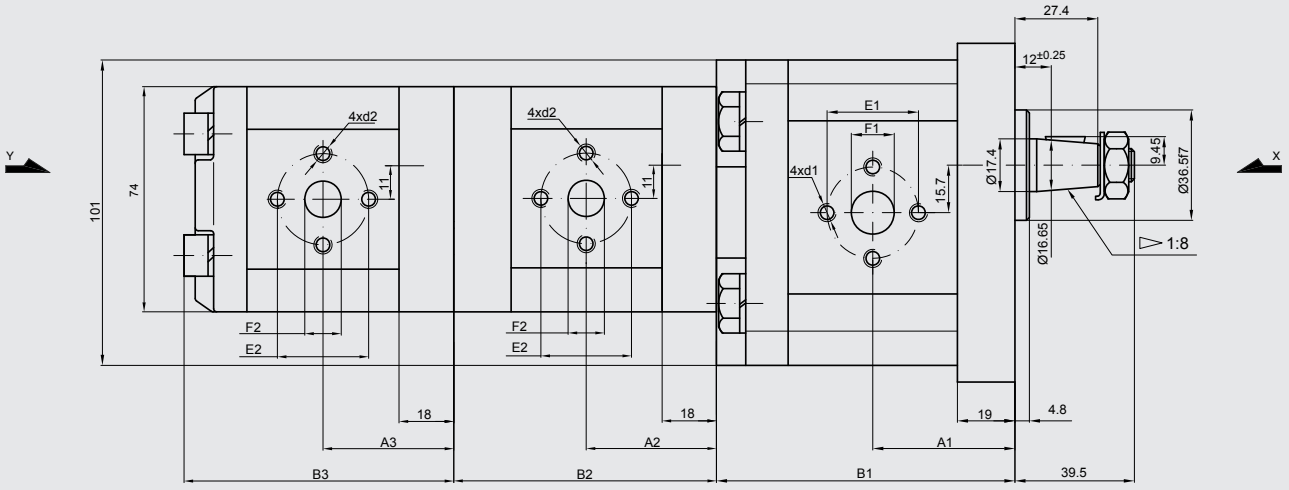

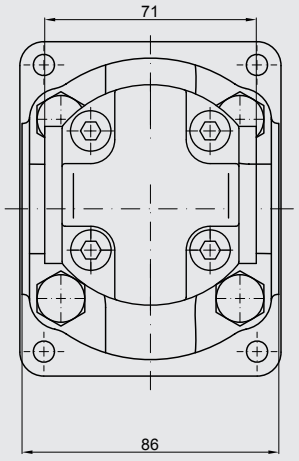

View Y

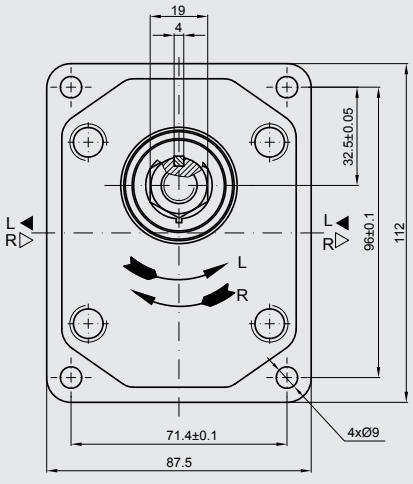

View X

Front pump size 2:

Displacement	Geometric displacement	Flow		Pressure Rated	Max. speed	Dimensions								
		at 1500 rpm	at max. rpm		n	A1	B1	Inlet			Outlet		
	[cm³/rev]	[l/min]	[l/min]	[bar]	[rpm]	[mm]	[mm]	E1	F1	d1	E1	F1	d1
450	4.5	6.14	14.33	250	3500	42.5	89.7	30	13.1	M6	30	13.1	M6
630	6.3	8.69	20.29			44	92.7						
820	8.2	11.32	26.40			45.5	95.6						
1000	10	13.95	32.55			47	98.7	40	19	M8		14.2	
1130	11.3	15.76	36.78			48	100.7						
1200	12	16.92	39.48			48.6	102						
1400	14	19.95	46.55			50	105.1						
1500	15	21.60	36.00		2500	51	106.6						
1600	16	23.04	38.40			52	108.3						
1900	19	27.36	45.60	200		54	113.2						
2200	22	31.68	42.24	180	2000	57	118.2						
2500	25	36.00	48.00	160		59.2	123.1				40	19	M8

Middle and end pump size 1:

Displacement	Geometric displacement	Flow		Pressure Rated	Max. speed
		at 1500 rpm	at max. rpm		n
	[cm³/rev]	[l/min]	[l/min]	[bar]	[rpm]
100	1	1.40	3.26	250	3500
125	1.25	1.74	4.07		
160	1.6	2.23	5.21		
200	2	2.82	6.58		
250	2.5	3.53	8.23		
315	3.15	4.44	10.36		
365	3.65	5.15	12.01		
420	4.2	5.92	13.82		
500	5	7.05	14.10		3000
610	6.1	8.69	14.49	200	2500
740	7.4	10.55	17.58	170	

Displacement	Dimensions									
	A2	B2	A3	B3	Inlet			Outlet		
	[mm]	[mm]	[mm]	[mm]	E2	F2	d2	E2	F2	d2
100	39.1	79	39.1	79	30	12	M6	30	12	M6
125	39.5	80	39.5	80						
160	40.3	81.6	40.3	81.6						
200	41.1	83.2	41.1	83.2						
250	42.1	85.2	42.1	85.2						
315	43.5	87.8	43.5	87.8						
365	44.4	89.9	44.4	89.9						
420	45.5	92.1	45.5	92.1						
500	47.1	95.2	47.1	95.2						
610	49.4	99.8	49.4	99.8						
740	52.1	105.2	52.1	105.2						

PGE104-.../.../...-.BR1/1/1-N

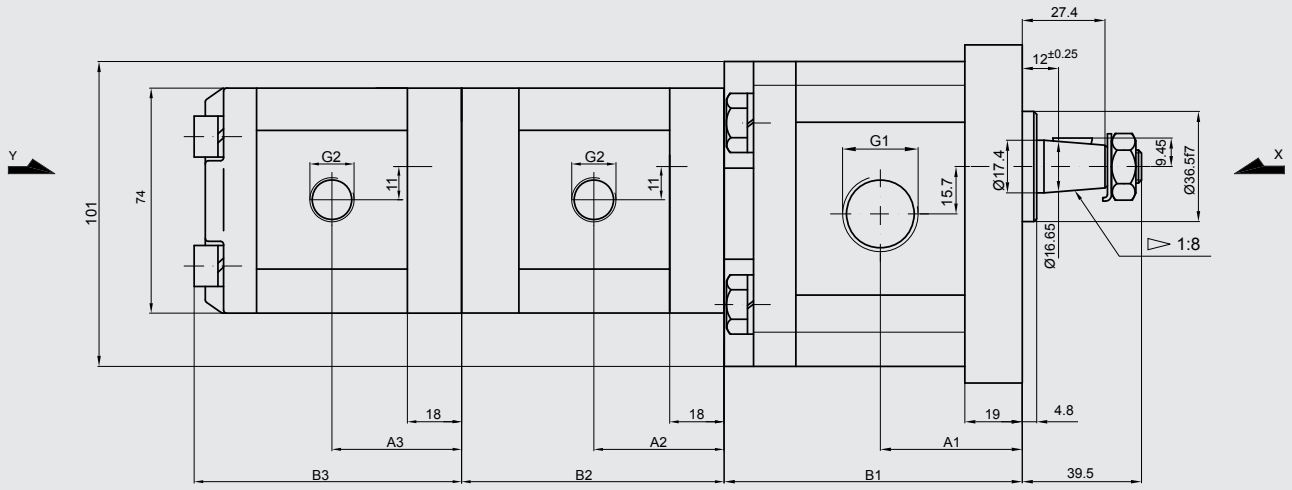

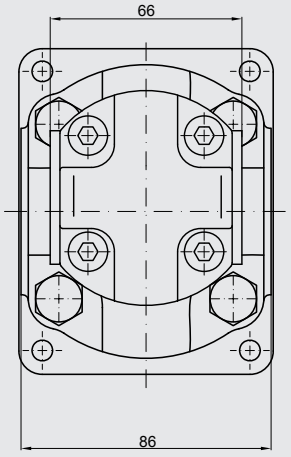

View Y

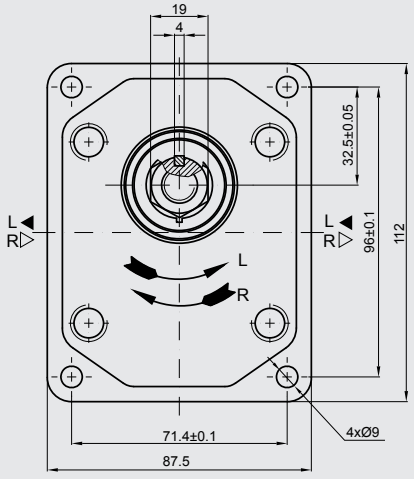

View X

Front pump size 2:

Displacement	Geometric displacement	Flow		Pressure Rated	Max. speed	Dimensions			
		at 1500 rpm	at max. rpm		n	A1	B1	Inlet	Outlet
	[cm³/rev]	[l/min]	[l/min]	[bar]	[rpm]	[mm]	[mm]	G1	G1
450	4.5	6.14	14.33	250	3500	42.5	89.7	G 1/2	G 1/2
630	6.3	8.69	20.29			44	92.7		
820	8.2	11.32	26.40			45.5	95.6		
1000	10	13.95	32.55			47	98.7	G 3/4	
1130	11.3	15.76	36.78			48	100.7		
1200	12	16.92	39.48			48.6	102		
1400	14	19.95	46.55			50	105.1		
1500	15	21.60	36.00		2500	51	106.6		
1600	16	23.04	38.40			52	108.3		
1900	19	27.36	45.60	200		54	113.2		
2200	22	31.68	42.24	180	2000	57	118.2		
2500	25	36.00	48.00	160		59.2	123.1		

Middle and end pump size 1:

Displacement	Geometric displacement	Flow		Pressure Rated	Max. speed
		at 1500 rpm	at max. rpm		n
	[cm³/rev]	[l/min]	[l/min]	[bar]	[rpm]
100	1	1.40	3.26	250	3500
125	1.25	1.74	4.07		
160	1.6	2.23	5.21		
200	2	2.82	6.58		
250	2.5	3.53	8.23		
315	3.15	4.44	10.36		
365	3.65	5.15	12.01		
420	4.2	5.92	13.82		
500	5	7.05	14.10		3000
610	6.1	8.69	14.49	200	2500
740	7.4	10.55	17.58	170	

Displacement	Dimensions					
	A2	B2	A3	B3	Inlet	Outlet
	[mm]	[mm]	[mm]	[mm]	G2	G2
100	39.1	79	39.1	79	G 3/8	G 3/8
125	39.5	80	39.5	80		
160	40.3	81.6	40.3	81.6		
200	41.1	83.2	41.1	83.2		
250	42.1	85.2	42.1	85.2		
315	43.5	87.8	43.5	87.8	G 1/2	
365	44.4	89.9	44.4	89.9		
420	45.5	92.1	45.5	92.1		
500	47.1	95.2	47.1	95.2		
610	49.4	99.8	49.4	99.8		
740	52.1	105.2	52.1	105.2		

6.5.26 Double pump size 3

PGE104-.../...-.BS4/4-N

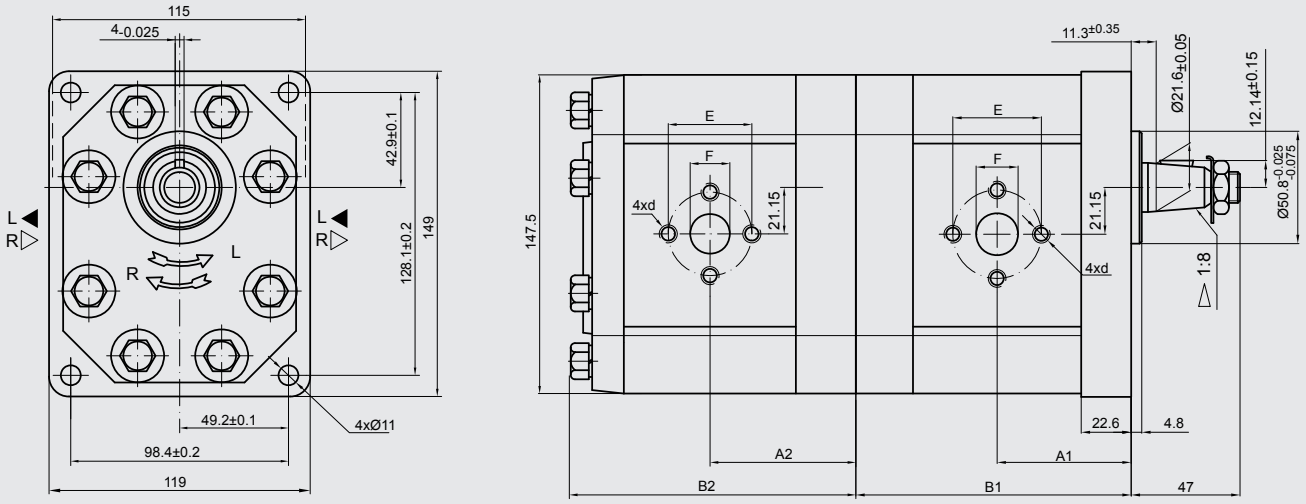

Displacement	Geometric displacement	Flow		Pressure Rated	Max. speed
	[cm³/rev]	at 1500 rpm [l/min]	at max. rpm [l/min]	[bar]	n [rpm]
2000	20	28.2	56.4	250	3000
2250	22.5	31.7	63.5		
2500	25	35.3	70.5		
2800	28	39.5	79.0		
3200	32	45.1	90.2		
3600	36	51.3	95.8	240	2800
4200	42	59.9	99.8	230	2500
4600	46	65.6	100.5	210	2300
5000	50	71.3	99.8	185	2100
5500	55	78.4	91.4	165	1750
6000	60	85.5	99.8	150	

Displacement	Dimensions									
	A1	B1	A2	B2	Inlet			Outlet		
	[mm]	[mm]	[mm]	[mm]	E	F	d	E	F	d
2000	56.1	114.7	58.3	118.9	40	19	M8	40	19	M8
2250	57.6	117.7	59.7	121.9						
2500	58.3	119.1	60.5	123.3						
2800	60.2	122.7	62.4	126.9						
3200	66.5	135.3	68.7	139.5	51	27	M10			
3600	68.0	138.5	70.2	142.7						
4200	70.8	144.0	73.0	148.3						
4600	72.7	147.8	74.9	152.0						
5000	74.5	151.4	76.7	155.6						
5500	76.7	155.9	78.9	160.1						
6000	78.7	160.4	80.9	164.6						

PGE104-.../...-.BS1/1-N

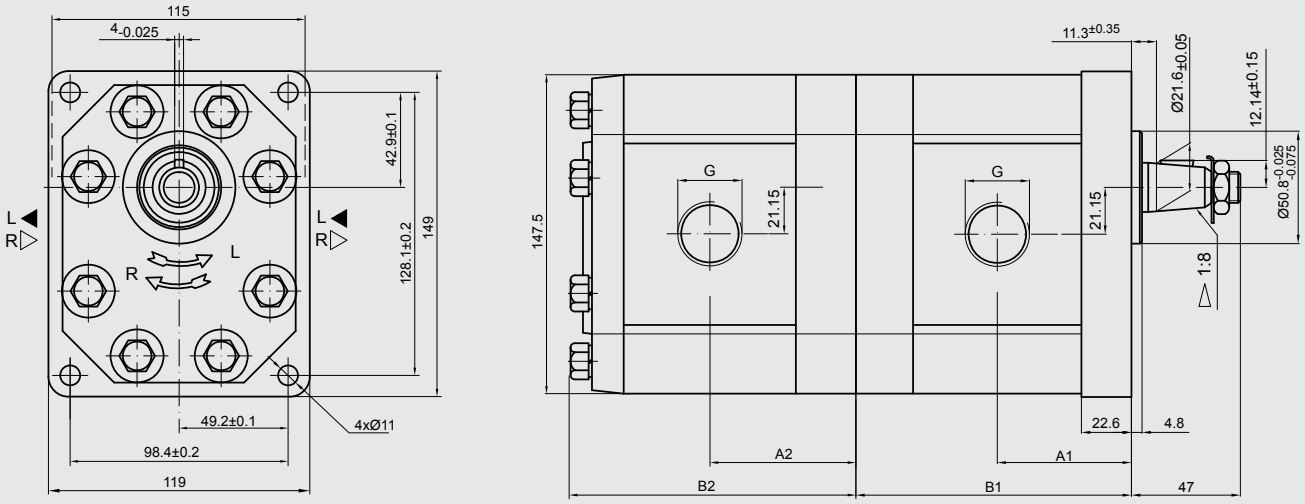

Displacement	Geometric displacement	Flow		Pressure Rated	Max. speed
	[cm³/rev]	at 1500 rpm [l/min]	at max. rpm [l/min]	[bar]	n [rpm]
2000	20	28.2	56.4	250	3000
2250	22.5	31.7	63.5		
2500	25	35.3	70.5		
2800	28	39.5	79.0		
3200	32	45.1	90.2		
3600	36	51.3	95.8	240	2800
4200	42	59.9	99.8	230	2500
4600	46	65.6	100.5	210	2300
5000	50	71.3	99.8	185	2100
5500	55	78.4	91.4	165	1750
6000	60	85.5	99.8	150	

Displacement	Dimensions					
	A1 [mm]	B1 [mm]	A2 [mm]	B2 [mm]	Inlet G	Outlet G
2000	56.1	114.7	58.3	118.9	G 3/4	G 3/4
2250	57.6	117.7	59.7	121.9		
2500	58.3	119.1	60.5	123.3		
2800	60.2	122.7	62.4	126.9		
3200	66.5	135.3	68.7	139.5		
3600	68.0	138.5	70.2	142.7	G 1	
4200	70.8	144.0	73.0	148.3		
4600	72.7	147.8	74.9	152.0		
5000	74.5	151.4	76.7	155.6		
5500	76.7	155.9	78.9	160.1		
6000	78.7	160.4	80.9	164.6		

PGE104-.../...-.BS7/7-N

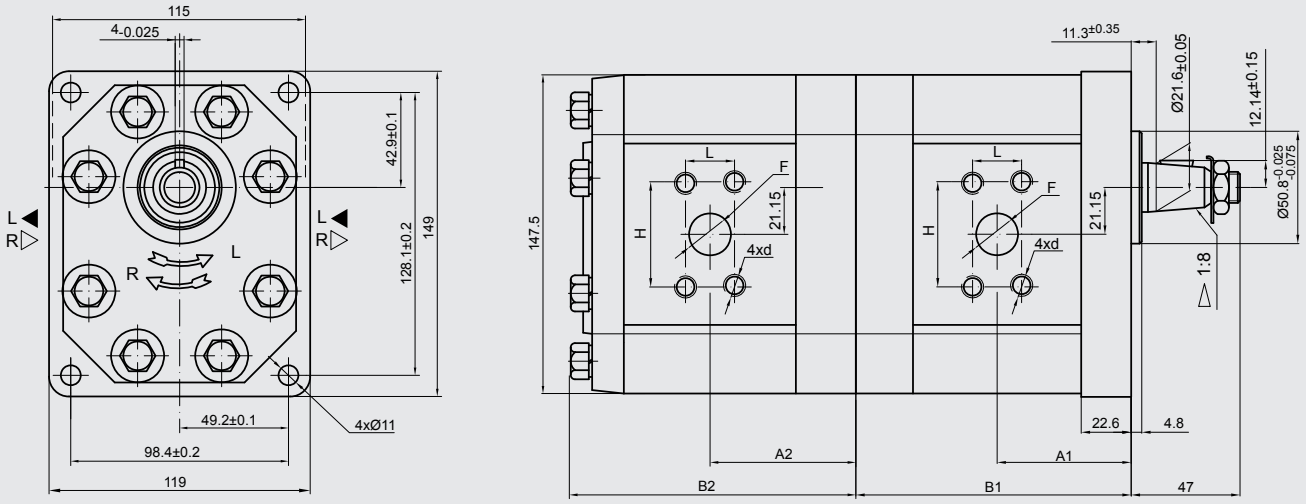

Displacement	Geometric displacement	Flow		Pressure Rated	Max. speed
	[cm³/rev]	at 1500 rpm [l/min]	at max. rpm [l/min]	[bar]	n [rpm]
2000	20	28.2	56.4	250	3000
2250	22.5	31.7	63.5		
2500	25	35.3	70.5		
2800	28	39.5	79.0		
3200	32	45.1	90.2		
3600	36	51.3	95.8	240	2800
4200	42	59.9	99.8	230	2500
4600	46	65.6	100.5	210	2300
5000	50	71.3	99.8	185	2100
5500	55	78.4	91.4	165	1750
6000	60	85.5	99.8	150	

Displacement	Dimensions											
	A1	B1	A2	B2	Inlet				Outlet			
	[mm]	[mm]	[mm]	[mm]	F	d	H	L	F	d	H	L
2000	56.1	114.7	58.3	118.9	19	M10	47.6	22.2	19	M10	47.6	22.2
2250	57.6	117.7	59.7	121.9								
2500	58.3	119.1	60.5	123.3								
2800	60.2	122.7	62.4	126.9								
3200	66.5	135.3	68.7	139.5	27		52.4	26.2				
3600	68.0	138.5	70.2	142.7								
4200	70.8	144.0	73.0	148.3								
4600	72.7	147.8	74.9	152.0								
5000	74.5	151.4	76.7	155.6								
5500	76.7	155.9	78.9	160.1								
6000	78.7	160.4	80.9	164.6								

PGE104-.../...-.AV5/5-N

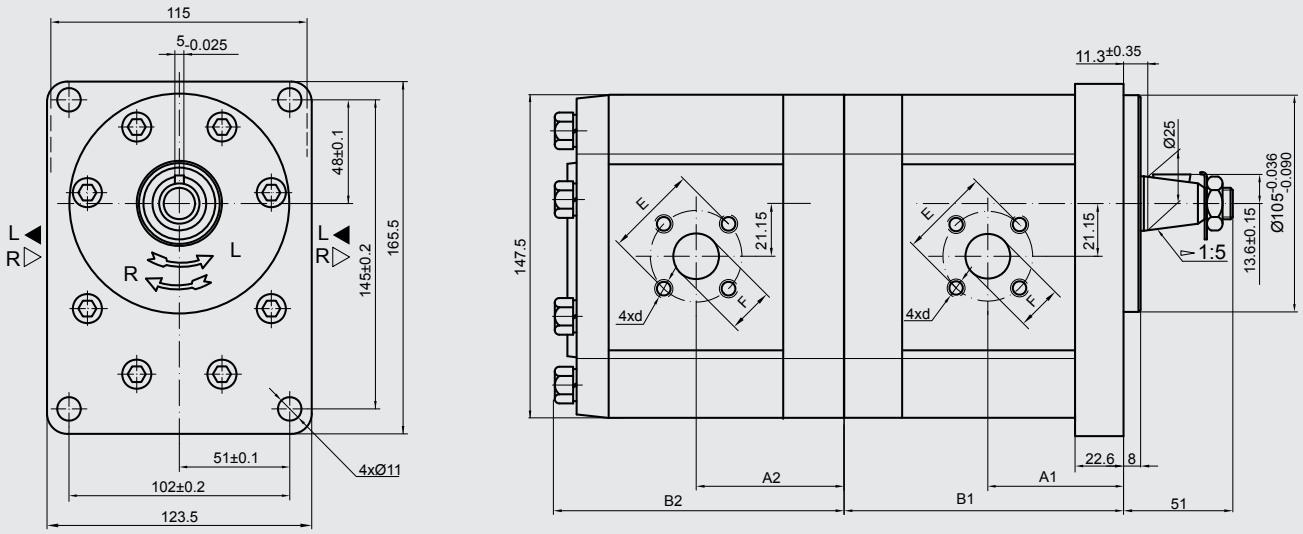

Displacement	Geometric displacement	Flow		Pressure Rated	Max. speed
		at 1500 rpm	at max. rpm		n
	[cm³/rev]	[l/min]	[l/min]	[bar]	[rpm]
2000	20	28.2	56.4	250	3000
2250	22.5	31.7	63.5		
2500	25	35.3	70.5		
2800	28	39.5	79.0		
3200	32	45.1	90.2		
3600	36	51.3	95.8	240	2800
4200	42	59.9	99.8	230	2500
4600	46	65.6	100.5	210	2300
5000	50	71.3	99.8	185	2100
5500	55	78.4	91.4	165	1750
6000	60	85.5	99.8	150	

Displacement	Dimensions									
	A1	B1	A2	B2	Inlet			Outlet		
	[mm]	[mm]	[mm]	[mm]	E	F	d	E	F	d
2000	56.1	114.7	58.3	118.9	40	19	M8	40	19	M8
2250	57.6	117.7	59.7	121.9						
2500	58.3	119.1	60.5	123.3						
2800	60.2	122.7	62.4	126.9						
3200	66.5	135.3	68.7	139.5	55	27		55		
3600	68.0	138.5	70.2	142.7						
4200	70.8	144.0	73.0	148.3						
4600	72.7	147.8	74.9	152.0						
5000	74.5	151.4	76.7	155.6						
5500	76.7	155.9	78.9	160.1						
6000	78.7	160.4	80.9	164.6						

PGE104-.../...-.AV1/1-N

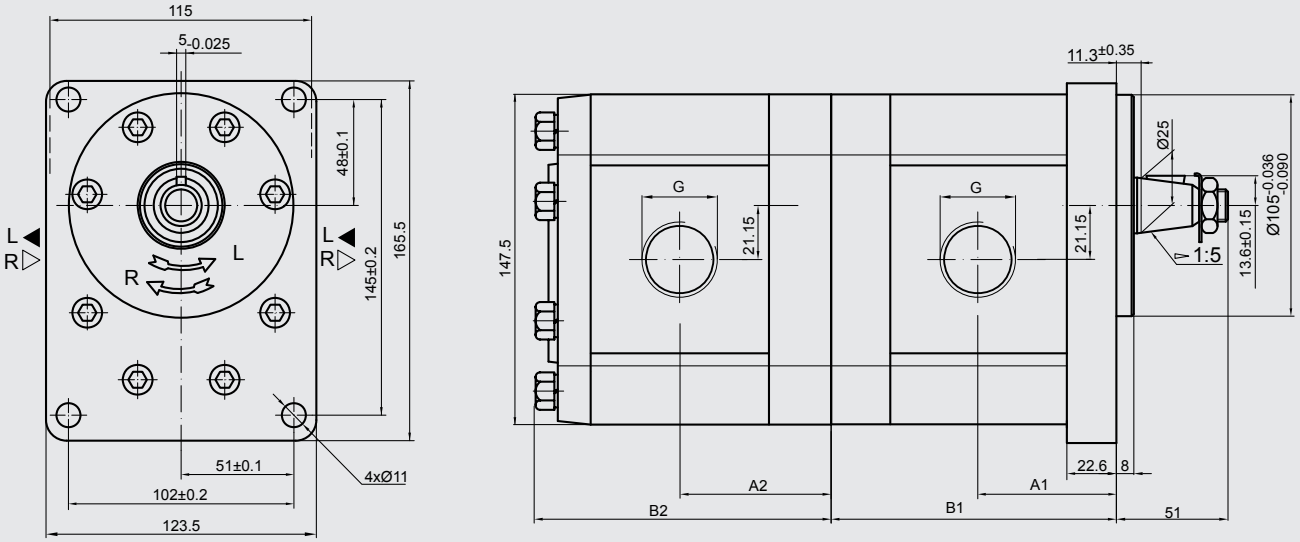

Displacement	Geometric displacement	Flow		Pressure Rated	Max. speed
	[cm³/rev]	at 1500 rpm [l/min]	at max. rpm [l/min]	[bar]	n [rpm]
2000	20	28.2	56.4	250	3000
2250	22.5	31.7	63.5		
2500	25	35.3	70.5		
2800	28	39.5	79.0		
3200	32	45.1	90.2		
3600	36	51.3	95.8	240	2800
4200	42	59.9	99.8	230	2500
4600	46	65.6	100.5	210	2300
5000	50	71.3	99.8	185	2100
5500	55	78.4	91.4	165	1750
6000	60	85.5	99.8	150	

Displacement	Dimensions					
	A1 [mm]	B1 [mm]	A2 [mm]	B2 [mm]	Inlet G	Outlet G
2000	56.1	114.7	58.3	118.9	G 3/4	G 3/4
2250	57.6	117.7	59.7	121.9		
2500	58.3	119.1	60.5	123.3		
2800	60.2	122.7	62.4	126.9		
3200	66.5	135.3	68.7	139.5	G 1	
3600	68.0	138.5	70.2	142.7		
4200	70.8	144.0	73.0	148.3		
4600	72.7	147.8	74.9	152.0		
5000	74.5	151.4	76.7	155.6		
5500	76.7	155.9	78.9	160.1		
6000	78.7	160.4	80.9	164.6		

PGE104-.../...-.FX4/4-N

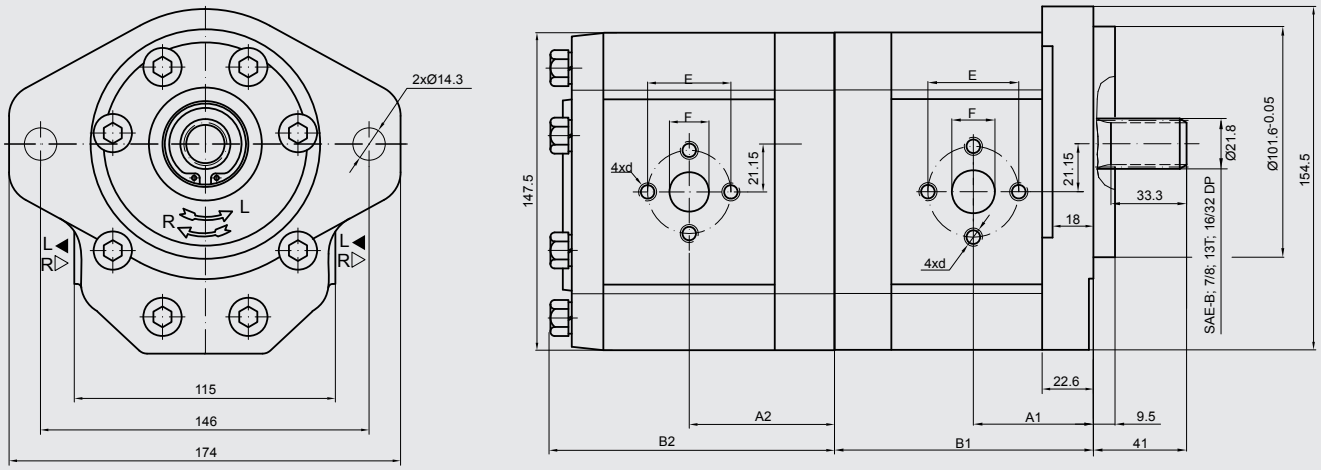

Displacement	Geometric displacement [cm³/rev]	Flow at 1500 rpm [l/min]	Flow at max. rpm [l/min]	Pressure Rated [bar]	Max. speed n [rpm]
2000	20	28.2	56.4	250	3000
2250	22.5	31.7	63.5		
2500	25	35.3	70.5		
2800	28	39.5	79.0		
3200	32	45.1	90.2		
3600	36	51.3	95.8	240	2800
4200	42	59.9	99.8	230	2500
4600	46	65.6	100.5	210	2300
5000	50	71.3	99.8	185	2100
5500	55	78.4	91.4	165	1750
6000	60	85.5	99.8	150	

Displacement	Dimensions									
	A1 [mm]	B1 [mm]	A2 [mm]	B2 [mm]	Inlet E	Inlet F	Inlet d	Outlet E	Outlet F	Outlet d
2000	56.1	114.7	58.3	118.9	40	19	M8	40	19	M8
2250	57.6	117.7	59.7	121.9						
2500	58.3	119.1	60.5	123.3						
2800	60.2	122.7	62.4	126.9						
3200	66.5	135.3	68.7	139.5	51	27	M10			
3600	68.0	138.5	70.2	142.7						
4200	70.8	144.0	73.0	148.3						
4600	72.7	147.8	74.9	152.0						
5000	74.5	151.4	76.7	155.6						
5500	76.7	155.9	78.9	160.1						
6000	78.7	160.4	80.9	164.6						

PGE104-.../...-.FX1/1-N

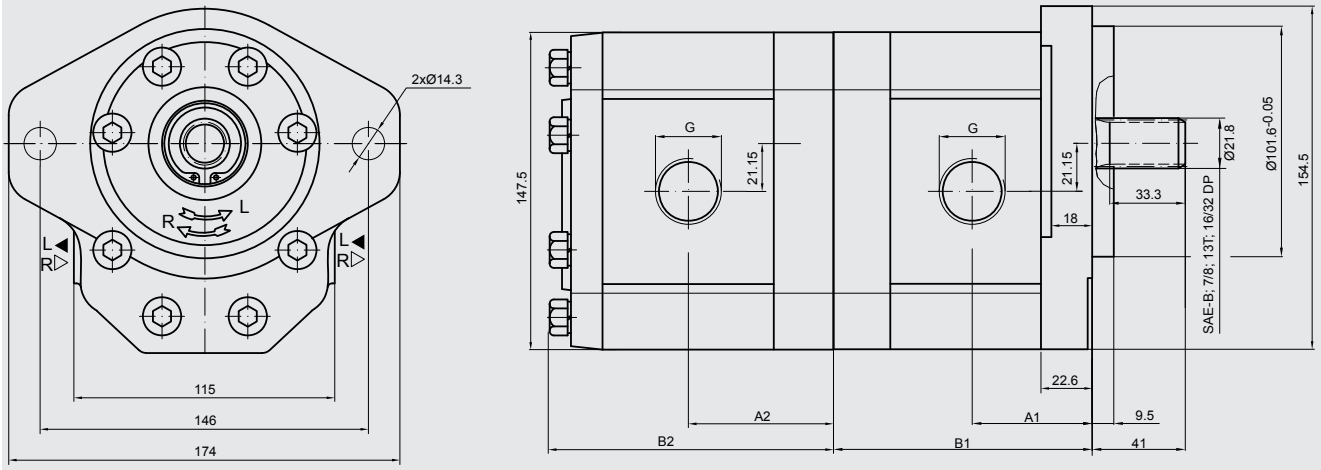

Displacement	Geometric displacement	Flow		Pressure Rated	Max. speed
	[cm³/rev]	at 1500 rpm [l/min]	at max. rpm [l/min]	[bar]	n [rpm]
2000	20	28.2	56.4	250	3000
2250	22.5	31.7	63.5		
2500	25	35.3	70.5		
2800	28	39.5	79.0		
3200	32	45.1	90.2		
3600	36	51.3	95.8	240	2800
4200	42	59.9	99.8	230	2500
4600	46	65.6	100.5	210	2300
5000	50	71.3	99.8	185	2100
5500	55	78.4	91.4	165	1750
6000	60	85.5	99.8	150	

Displacement	Dimensions					
	A1 [mm]	B1 [mm]	A2 [mm]	B2 [mm]	Inlet G	Outlet G
2000	56.1	114.7	58.3	118.9	G 3/4	G 3/4
2250	57.6	117.7	59.7	121.9		
2500	58.3	119.1	60.5	123.3		
2800	60.2	122.7	62.4	126.9		
3200	66.5	135.3	68.7	139.5	G 1	
3600	68.0	138.5	70.2	142.7		
4200	70.8	144.0	73.0	148.3		
4600	72.7	147.8	74.9	152.0		
5000	74.5	151.4	76.7	155.6		
5500	76.7	155.9	78.9	160.1		
6000	78.7	160.4	80.9	164.6		

PGE104-.../...-.FX7/7-N

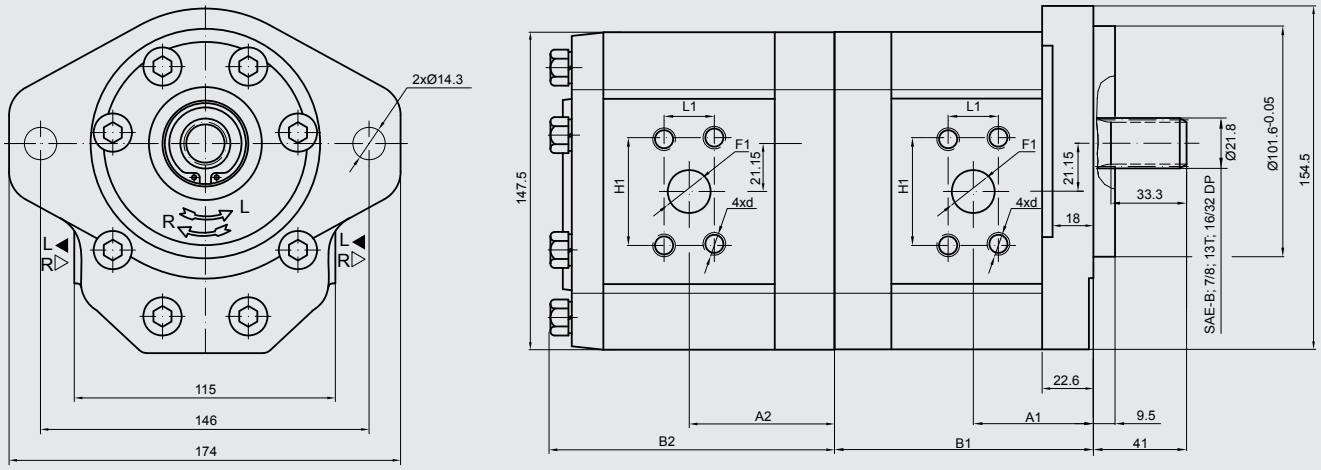

Displacement	Geometric displacement	Flow		Pressure Rated	Max. speed
	[cm³/rev]	at 1500 rpm [l/min]	at max. rpm [l/min]	[bar]	n [rpm]
2000	20	28.2	56.4	250	3000
2250	22.5	31.7	63.5		
2500	25	35.3	70.5		
2800	28	39.5	79.0		
3200	32	45.1	90.2		
3600	36	51.3	95.8	240	2800
4200	42	59.9	99.8	230	2500
4600	46	65.6	100.5	210	2300
5000	50	71.3	99.8	185	2100
5500	55	78.4	91.4	165	1750
6000	60	85.5	99.8	150	

Displacement	Dimensions											
	A1	B1	A2	B2	Inlet				Outlet			
	[mm]	[mm]	[mm]	[mm]	F1	d	H1	L1	F1	d	H1	L1
2000	56.1	114.7	58.3	118.9	19	M10	47.6	22.2	19	M10	47.6	22.2
2250	57.6	117.7	59.7	121.9								
2500	58.3	119.1	60.5	123.3								
2800	60.2	122.7	62.4	126.9								
3200	66.5	135.3	68.7	139.5	27		52.4	26.2				
3600	68.0	138.5	70.2	142.7								
4200	70.8	144.0	73.0	148.3								
4600	72.7	147.8	74.9	152.0								
5000	74.5	151.4	76.7	155.6								
5500	76.7	155.9	78.9	160.1								
6000	78.7	160.4	80.9	164.6								

6.5.27 Triple pump size 3

PGE104-.../.../...-.BS4/4/4-N

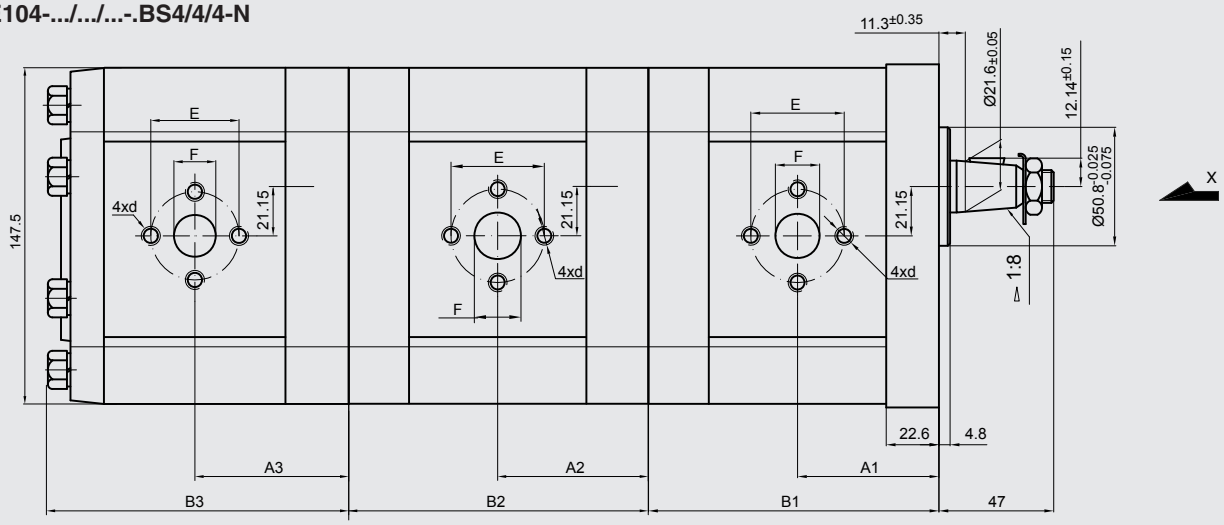

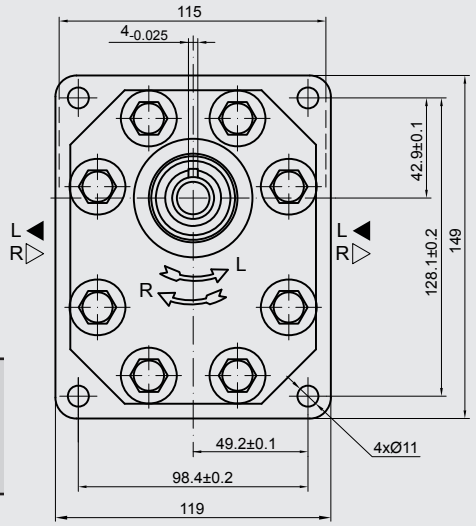

View X

Displacement	Geometric displacement	Flow		Pressure Rated	Max. speed
	[cm³/rev]	at 1500 rpm [l/min]	at max. rpm [l/min]	[bar]	n [rpm]
2000	20	28.2	56.4	250	3000
2250	22.5	31.7	63.5		
2500	25	35.3	70.5		
2800	28	39.5	79.0		
3200	32	45.1	90.2		
3600	36	51.3	95.8	240	2800
4200	42	59.9	99.8	230	2500
4600	46	65.6	100.5	210	2300
5000	50	71.3	99.8	185	2100
5500	55	78.4	91.4	165	1750
6000	60	85.5	99.8	150	

Displacement	Dimensions											
	A1	B1	A2	B2	A3	B3	Inlet			Outlet		
	[mm]	[mm]	[mm]	[mm]	[mm]	[mm]	E	F	d	E	F	d
2000	56.1	114.7	58.5	117.1	58.3	118.9	40	19	M8	40	19	M8
2250	57.6	117.7	60.0	120.1	59.7	121.9						
2500	58.3	119.1	60.8	121.5	60.5	123.3						
2800	60.2	122.7	62.5	125.1	62.4	126.9						
3200	66.5	135.3	68.8	137.7	68.7	139.5	51	27	M10			
3600	68.0	138.5	70.5	140.9	70.2	142.7						
4200	70.8	144.0	73.2	146.5	73.0	148.3						
4600	72.7	147.8	75.1	150.2	74.9	152.0						
5000	74.5	151.4	76.9	153.8	76.7	155.6						
5500	76.7	155.9	79.1	158.3	78.9	160.1						
6000	78.7	160.4	81.4	162.8	80.9	164.6						

PGE104-.../.../...-.BS1/1/1-N

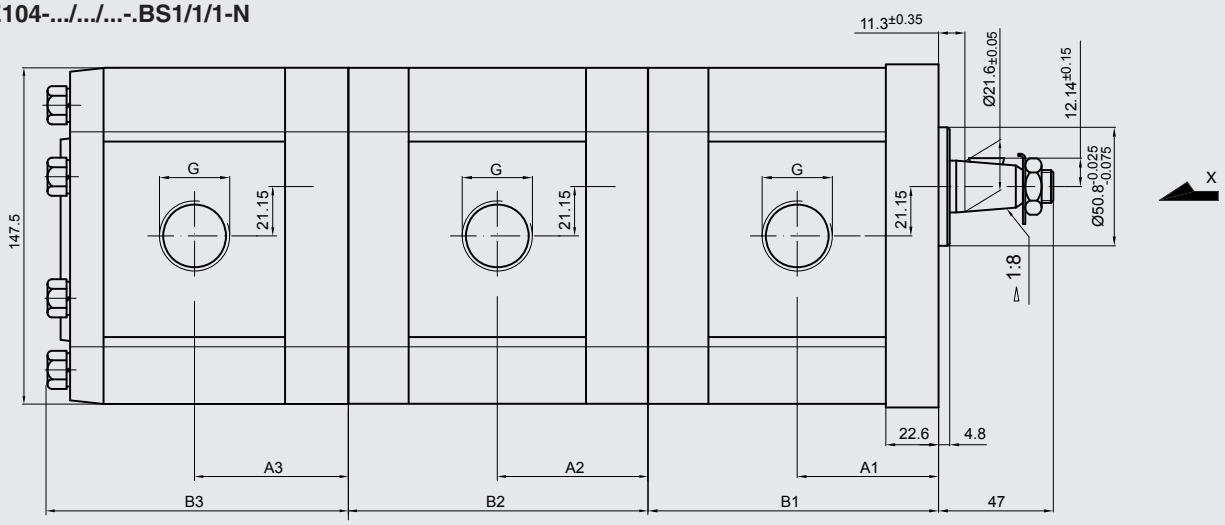

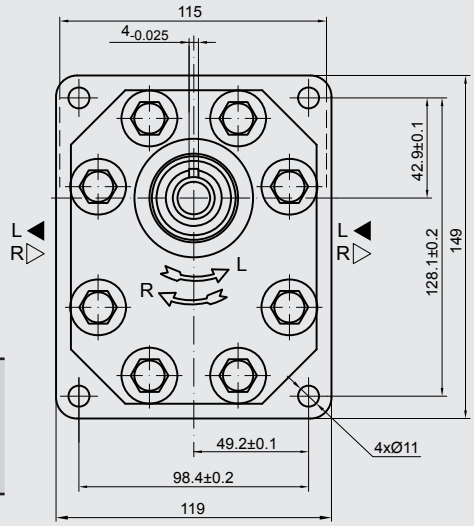

View X

Displacement	Geometric displacement	Flow		Pressure Rated	Max. speed
		at 1500 rpm	at max. rpm		n
	[cm³/rev]	[l/min]	[l/min]	[bar]	[rpm]
2000	20	28.2	56.4	250	3000
2250	22.5	31.7	63.5		
2500	25	35.3	70.5		
2800	28	39.5	79.0		
3200	32	45.1	90.2		
3600	36	51.3	95.8	240	2800
4200	42	59.9	99.8	230	2500
4600	46	65.6	100.5	210	2300
5000	50	71.3	99.8	185	2100
5500	55	78.4	91.4	165	1750
6000	60	85.5	99.8	150	

Displacement	Dimensions							
	A1 [mm]	B1 [mm]	A2 [mm]	B2 [mm]	A3 [mm]	B3 [mm]	Inlet G	Outlet G
2000	56.1	114.7	58.5	117.1	58.3	118.9	G 3/4	G 3/4
2250	57.6	117.7	60.0	120.1	59.7	121.9		
2500	58.3	119.1	60.8	121.5	60.5	123.3		
2800	60.2	122.7	62.5	125.1	62.4	126.9		
3200	66.5	135.3	68.8	137.7	68.7	139.5	G 1	
3600	68.0	138.5	70.5	140.9	70.2	142.7		
4200	70.8	144.0	73.2	146.5	73.0	148.3		
4600	72.7	147.8	75.1	150.2	74.9	152.0		
5000	74.5	151.4	76.9	153.8	76.7	155.6		
5500	76.7	155.9	79.1	158.3	78.9	160.1		
6000	78.7	160.4	81.4	162.8	80.9	164.6		

PGE104-.../.../...-.BS7/7/7-N

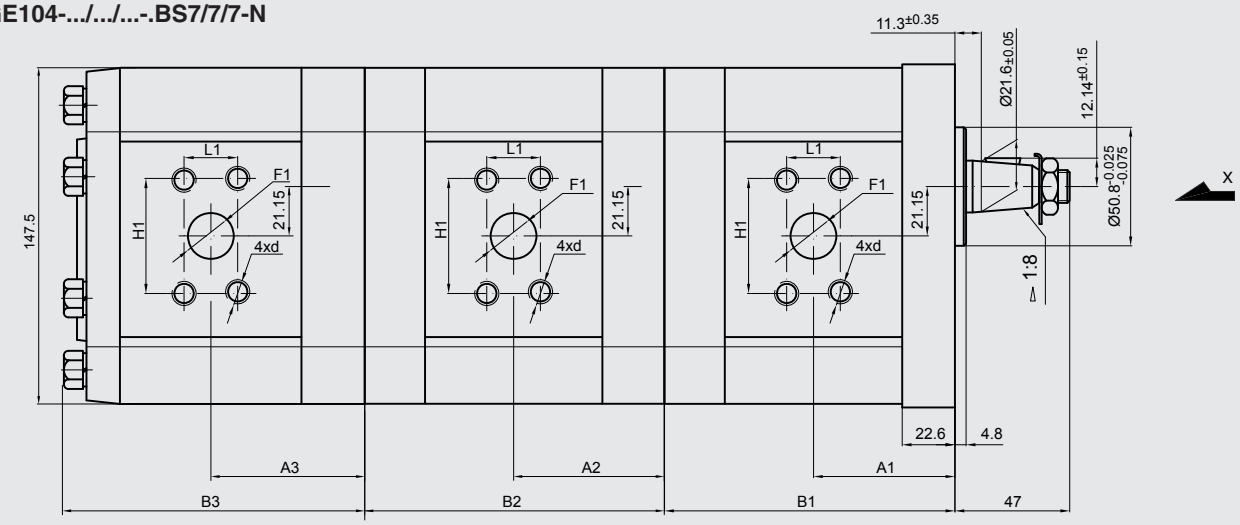

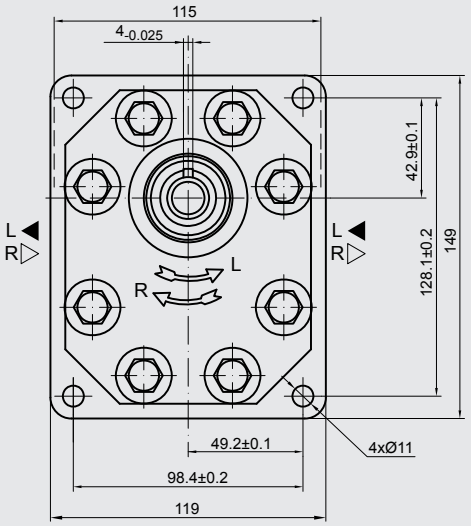

View X

Displacement	Geometric displacement	Flow		Pressure Rated	Max. speed
	[cm³/rev]	at 1500 rpm [l/min]	at max. rpm [l/min]	[bar]	n [rpm]
2000	20	28.2	56.4	250	3000
2250	22.5	31.7	63.5		
2500	25	35.3	70.5		
2800	28	39.5	79.0		
3200	32	45.1	90.2		
3600	36	51.3	95.8	240	2800
4200	42	59.9	99.8	230	2500
4600	46	65.6	100.5	210	2300
5000	50	71.3	99.8	185	2100
5500	55	78.4	91.4	165	1750
6000	60	85.5	99.8	150	

Displacement	Dimensions													
	A1	B1	A2	B2	A3	B3	Inlet				Outlet			
	[mm]	[mm]	[mm]	[mm]	[mm]	[mm]	F1	d	H1	L1	F1	d	H1	L1
2000	56.1	114.7	58.5	117.1	58.3	118.9	19	M10	47.6	22.2	19	M10	47.6	22.2
2250	57.6	117.7	60.0	120.1	59.7	121.9								
2500	58.3	119.1	60.8	121.5	60.5	123.3								
2800	60.2	122.7	62.5	125.1	62.4	126.9								
3200	66.5	135.3	68.8	137.7	68.7	139.5	27		52.4	26.2				
3600	68.0	138.5	70.5	140.9	70.2	142.7								
4200	70.8	144.0	73.2	146.5	73.0	148.3								
4600	72.7	147.8	75.1	150.2	74.9	152.0								
5000	74.5	151.4	76.9	153.8	76.7	155.6								
5500	76.7	155.9	79.1	158.3	78.9	160.1								
6000	78.7	160.4	81.4	162.8	80.9	164.6								

PGE104-.../.../...-.AV5/5/5-N

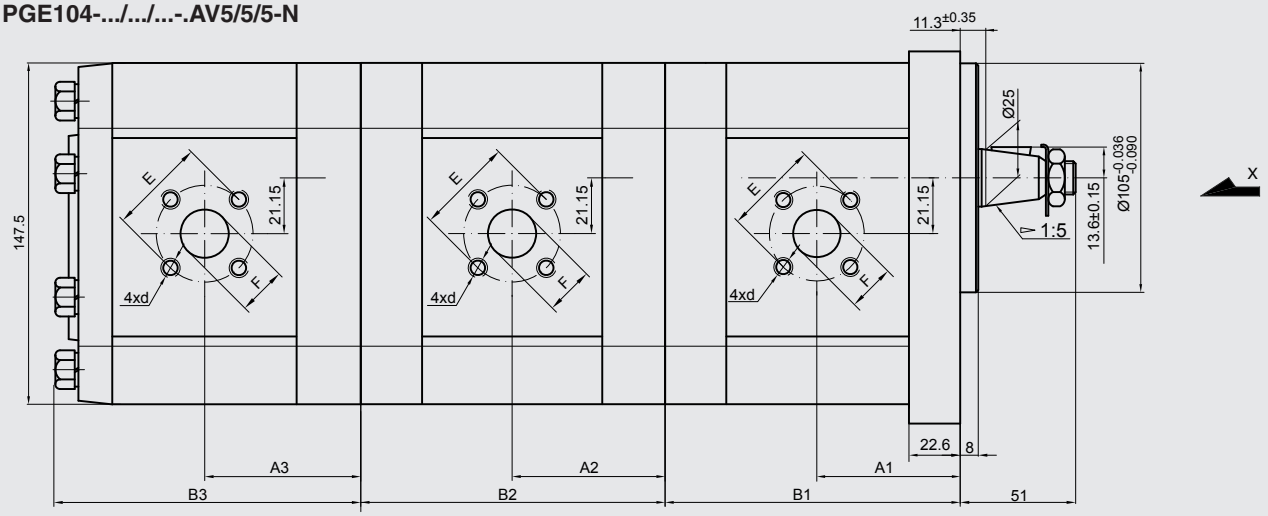

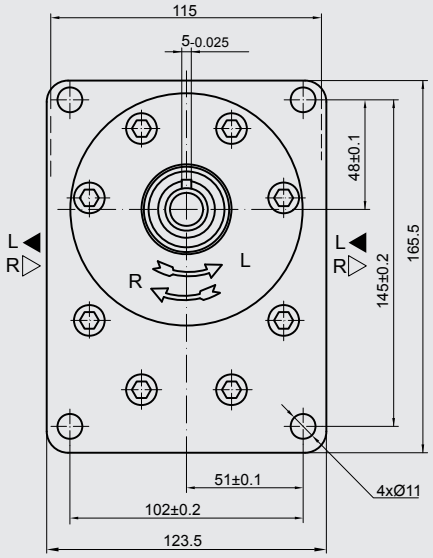

View X

Displacement	Geometric displacement	Flow		Pressure Rated	Max. speed
		at 1500 rpm	at max. rpm		n
	[cm³/rev]	[l/min]	[l/min]	[bar]	[rpm]
2000	20	28.2	56.4	250	3000
2250	22.5	31.7	63.5		
2500	25	35.3	70.5		
2800	28	39.5	79.0		
3200	32	45.1	90.2		
3600	36	51.3	95.8	240	2800
4200	42	59.9	99.8	230	2500
4600	46	65.6	100.5	210	2300
5000	50	71.3	99.8	185	2100
5500	55	78.4	91.4	165	1750
6000	60	85.5	99.8	150	

Displacement	Dimensions											
	A1	B1	A2	B2	A3	B3	Inlet			Outlet		
	[mm]	[mm]	[mm]	[mm]	[mm]	[mm]	E	F	d	E	F	d
2000	56.1	114.7	58.5	117.1	58.3	118.9	40	19	M8	40	19	M8
2250	57.6	117.7	60.0	120.1	59.7	121.9						
2500	58.3	119.1	60.8	121.5	60.5	123.3						
2800	60.2	122.7	62.5	125.1	62.4	126.9						
3200	66.5	135.3	68.8	137.7	68.7	139.5	55	27		55		
3600	68.0	138.5	70.5	140.9	70.2	142.7						
4200	70.8	144.0	73.2	146.5	73.0	148.3						
4600	72.7	147.8	75.1	150.2	74.9	152.0						
5000	74.5	151.4	76.9	153.8	76.7	155.6						
5500	76.7	155.9	79.1	158.3	78.9	160.1						
6000	78.7	160.4	81.4	162.8	80.9	164.6						

PGE104-.../.../...-.FX4/4/4-N

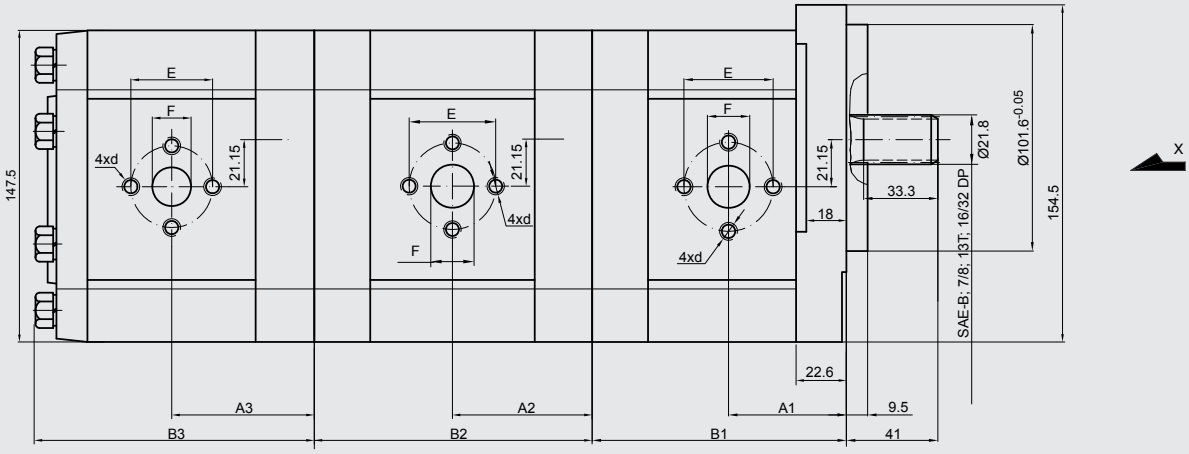

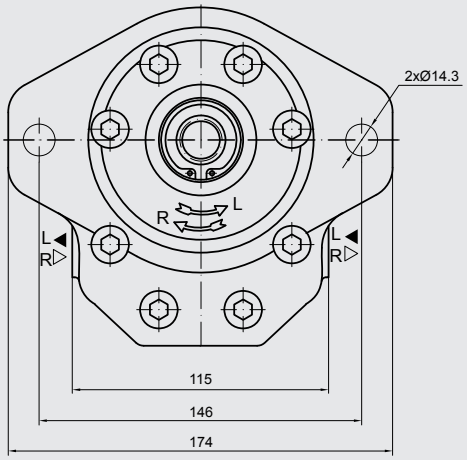

View X

Displacement	Geometric displacement	Flow		Pressure Rated	Max. speed
	[cm³/rev]	at 1500 rpm [l/min]	at max. rpm [l/min]	[bar]	n [rpm]
2000	20	28.2	56.4	250	3000
2250	22.5	31.7	63.5		
2500	25	35.3	70.5		
2800	28	39.5	79.0		
3200	32	45.1	90.2		
3600	36	51.3	95.8	240	2800
4200	42	59.9	99.8	230	2500
4600	46	65.6	100.5	210	2300
5000	50	71.3	99.8	185	2100
5500	55	78.4	91.4	165	1750
6000	60	85.5	99.8	150	

Displacement	Dimensions											
	A1	B1	A2	B2	A3	B3	Inlet			Outlet		
	[mm]	[mm]	[mm]	[mm]	[mm]	[mm]	E	F	d	E	F	d
2000	56.1	114.7	58.5	117.1	58.3	118.9	40	19	M8	40	19	M8
2250	57.6	117.7	60.0	120.1	59.7	121.9						
2500	58.3	119.1	60.8	121.5	60.5	123.3						
2800	60.2	122.7	62.5	125.1	62.4	126.9						
3200	66.5	135.3	68.8	137.7	68.7	139.5	51	27	M10			
3600	68.0	138.5	70.5	140.9	70.2	142.7						
4200	70.8	144.0	73.2	146.5	73.0	148.3						
4600	72.7	147.8	75.1	150.2	74.9	152.0						
5000	74.5	151.4	76.9	153.8	76.7	155.6						
5500	76.7	155.9	79.1	158.3	78.9	160.1						
6000	78.7	160.4	81.4	162.8	80.9	164.6						

PGE104-.../.../...-.FX7/7/7-N

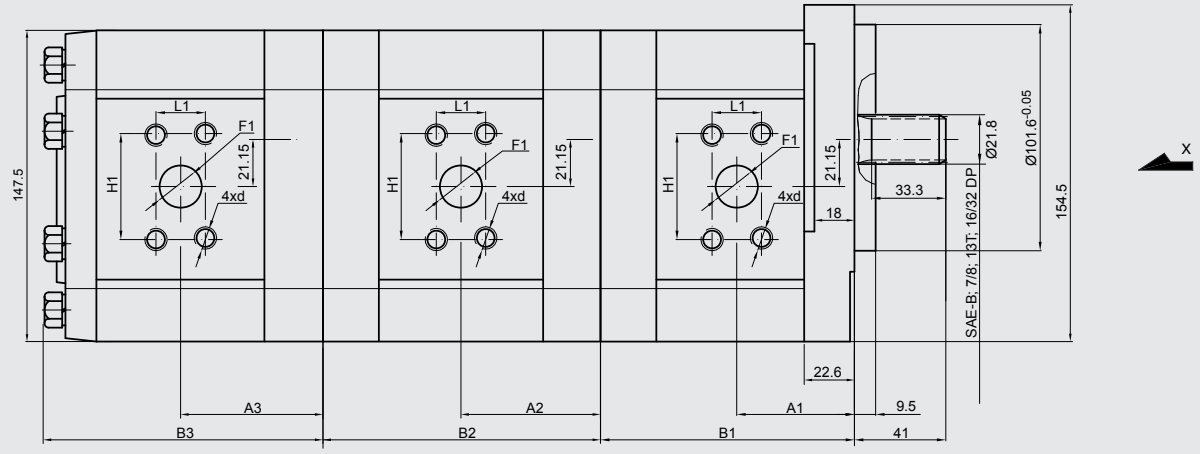

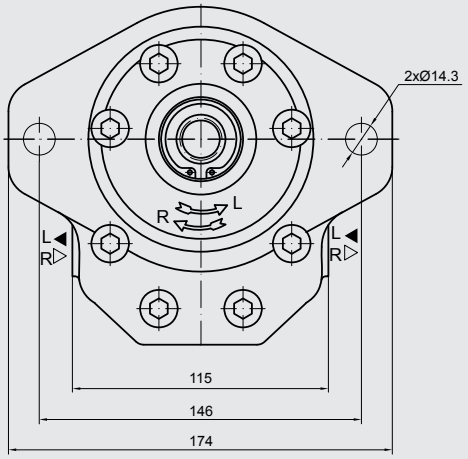

View X

Displacement	Geometric displacement	Flow		Pressure Rated	Max. speed
		at 1500 rpm	at max. rpm		n
	[cm³/rev]	[l/min]	[l/min]	[bar]	[rpm]
2000	20	28.2	56.4	250	3000
2250	22.5	31.7	63.5		
2500	25	35.3	70.5		
2800	28	39.5	79.0		
3200	32	45.1	90.2		
3600	36	51.3	95.8	240	2800
4200	42	59.9	99.8	230	2500
4600	46	65.6	100.5	210	2300
5000	50	71.3	99.8	185	2100
5500	55	78.4	91.4	165	1750
6000	60	85.5	99.8	150	

Displacement	Dimensions													
	A1	B1	A2	B2	A3	B3	Inlet				Outlet			
	[mm]	[mm]	[mm]	[mm]	[mm]	[mm]	F1	d	H1	L1	F1	d	H1	L1
2000	56.1	114.7	58.5	117.1	58.3	118.9	19	M10	47.6	22.2	19	M10	47.6	22.2
2250	57.6	117.7	60.0	120.1	59.7	121.9								
2500	58.3	119.1	60.8	121.5	60.5	123.3								
2800	60.2	122.7	62.5	125.1	62.4	126.9								
3200	66.5	135.3	68.8	137.7	68.7	139.5	27		52.4	26.2				
3600	68.0	138.5	70.5	140.9	70.2	142.7								
4200	70.8	144.0	73.2	146.5	73.0	148.3								
4600	72.7	147.8	75.1	150.2	74.9	152.0								
5000	74.5	151.4	76.9	153.8	76.7	155.6								
5500	76.7	155.9	79.1	158.3	78.9	160.1								
6000	78.7	160.4	81.4	162.8	80.9	164.6								

6.5.28 Double pump size 3 / size 2

PGE104-.../...-.BS4/4-N

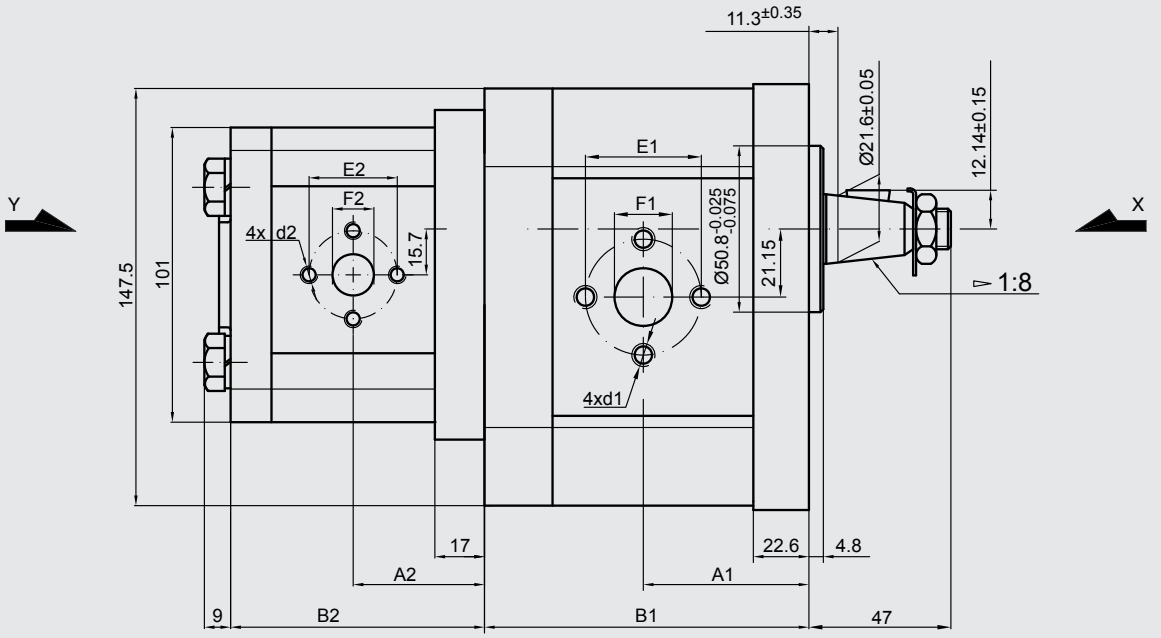

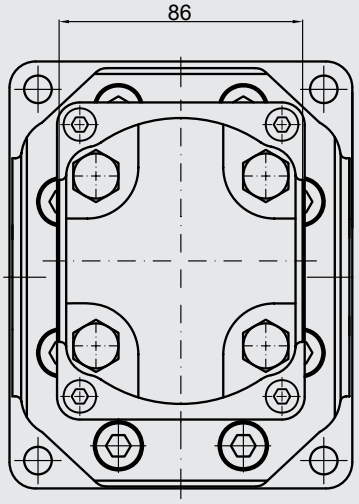

View Y

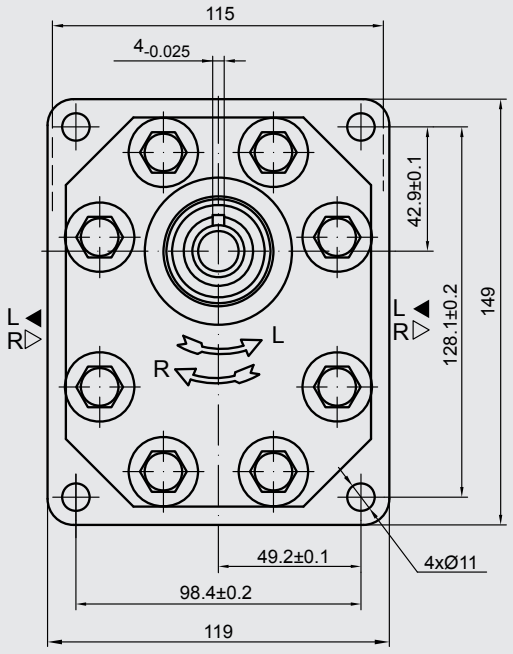

View X

Front pump size 3:

Displacement	Geometric displacement	Flow		Pressure Rated	Max. speed	Dimensions								
		at 1500 rpm	at max. rpm		n	A1	B1	Inlet			Outlet		
	[cm³/rev]	[l/min]	[l/min]	[bar]	[rpm]	[mm]	[mm]	E1	F1	d1	E1	F1	d1
2000	20	28.2	56.4	250	3000	56.1	114.7	40	19	M8	40	19	M8
2250	22.5	31.7	63.5			57.6	117.7						
2500	25	35.3	70.5			58.3	119.1						
2800	28	39.5	79.0			60.2	122.7						
3200	32	45.1	90.2			66.5	135.3	51	27	M10			
3600	36	51.3	95.8	240	2800	68.0	138.5						
4200	42	59.9	99.8	230	2500	70.8	144.0						
4600	46	65.6	100.5	210	2300	72.7	147.8						
5000	50	71.3	99.8	185	2100	74.5	151.4						
5500	55	78.4	91.4	165	1750	76.7	155.9						
6000	60	85.5	99.8	150		78.7	160.4						

End pump size 2:

Displacement	Geometric displacement	Flow		Pressure Rated	Max. speed	Dimensions								
		at 1500 rpm	at max. rpm		n	A2	B2	Inlet			Outlet		
	[cm³/rev]	[l/min]	[l/min]	[bar]	[rpm]	[mm]	[mm]	E2	F2	d2	E2	F2	d2
450	4.5	6.14	14.33	250	3500	40.5	78	30	13.1	M6	30	13.1	M6
630	6.3	8.69	20.29			42	81						
820	8.2	11.32	26.40			43.5	83.9						
1000	10	13.95	32.55			45	87	40	19	M8		14.2	
1130	11.3	15.76	36.78			46	89.1						
1200	12	16.92	39.48			46.6	90.3						
1400	14	19.95	46.55			48	93.4						
1500	15	21.60	36.00		2500	49	95						
1600	16	23.04	38.40			50	96.6						
1900	19	27.36	45.60	200		52	101.5						
2200	22	31.68	42.24	180	2000	55	106.5						
2500	25	36.00	48.00	160		57.2	111.4				40	19	M8

PGE104-.../...-.BS1/1-N

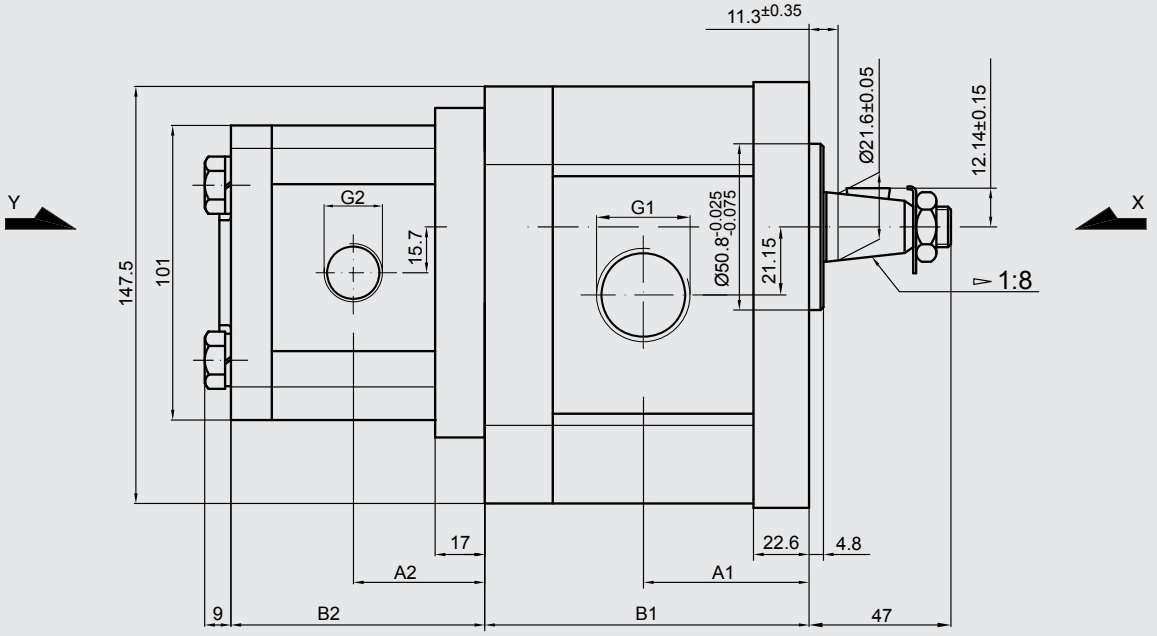

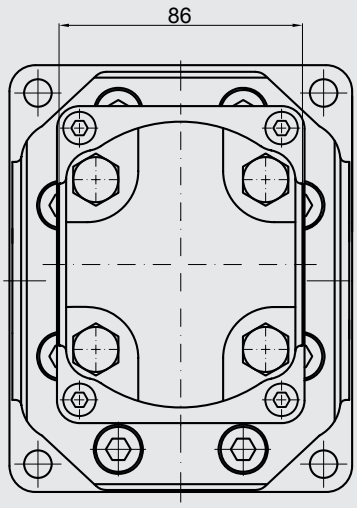

View Y

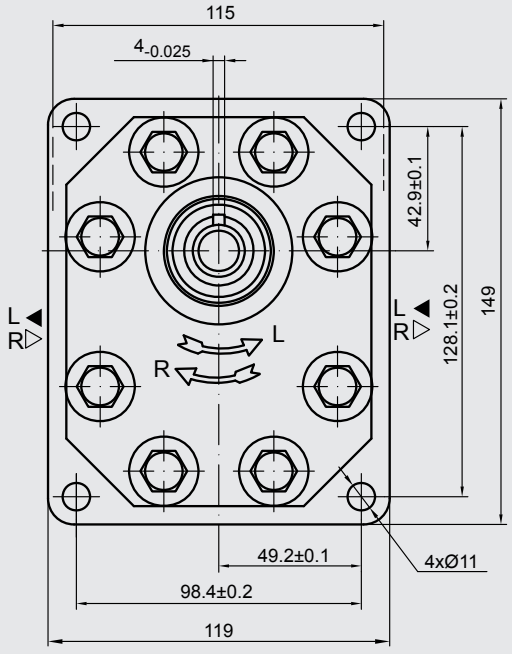

View X

Front pump size 3:

Displacement	Geometric displacement	Flow		Pressure Rated	Max. speed	Dimensions			
		at 1500 rpm	at max. rpm		n	A1	B1	Inlet	Outlet
	[cm³/rev]	[l/min]	[l/min]	[bar]	[rpm]	[mm]	[mm]	G1	G1
2000	20	28.2	56.4	250	3000	56.1	114.7	G 3/4	G 3/4
2250	22.5	31.7	63.5			57.6	117.7		
2500	25	35.3	70.5			58.3	119.1		
2800	28	39.5	79.0			60.2	122.7		
3200	32	45.1	90.2			66.5	135.3	G 1	
3600	36	51.3	95.8	240	2800	68.0	138.5		
4200	42	59.9	99.8	230	2500	70.8	144.0		
4600	46	65.6	100.5	210	2300	72.7	147.8		
5000	50	71.3	99.8	185	2100	74.5	151.4		
5500	55	78.4	91.4	165	1750	76.7	155.9		
6000	60	85.5	99.8	150		78.7	160.4		

End pump size 2:

Displacement	Geometric displacement	Flow		Pressure Rated	Max. speed	Dimensions			
		at 1500 rpm	at max. rpm		n	A2	B2	Inlet	Outlet
	[cm³/rev]	[l/min]	[l/min]	[bar]	[rpm]	[mm]	[mm]	G2	G2
450	4.5	6.14	14.33	250	3500	40.5	78	G 1/2	G 1/2
630	6.3	8.69	20.29			42	81		
820	8.2	11.32	26.40			43.5	83.9		
1000	10	13.95	32.55			45	87	G 3/4	
1130	11.3	15.76	36.78			46	89.1		
1200	12	16.92	39.48			46.6	90.3		
1400	14	19.95	46.55			48	93.4		
1500	15	21.60	36.00		2500	49	95		
1600	16	23.04	38.40			50	96.6		
1900	19	27.36	45.60	200		52	101.5		
2200	22	31.68	42.24	180	2000	55	106.5		
2500	25	36.00	48.00	160		57.2	111.4		

PGE104-.../...-.FX4/4-N

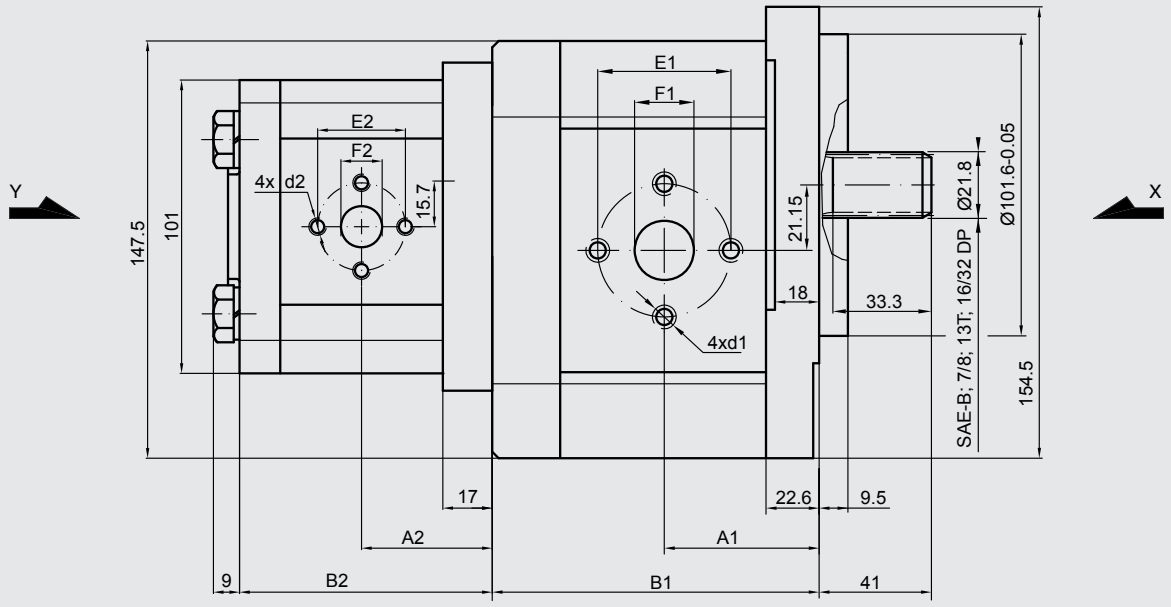

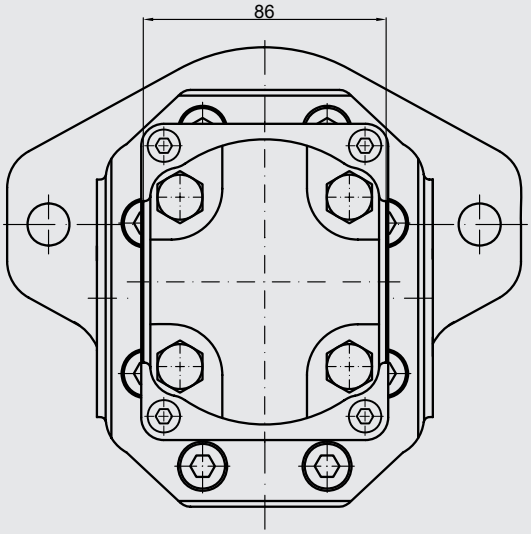

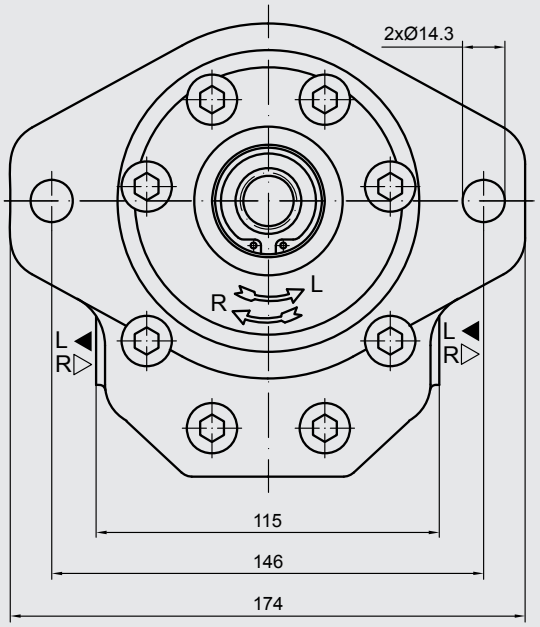

View Y

View X

Front pump size 3:

Displacement	Geometric displacement	Flow		Pressure Rated	Max. speed	Dimensions								
		at 1500 rpm	at max. rpm		n	A1	B1	Inlet			Outlet		
	[cm³/rev]	[l/min]	[l/min]	[bar]	[rpm]	[mm]	[mm]	E1	F1	d1	E1	F1	d1
2000	20	28.2	56.4	250	3000	56.1	114.7	40	19	M8	40	19	M8
2250	22.5	31.7	63.5			57.6	117.7						
2500	25	35.3	70.5			58.3	119.1						
2800	28	39.5	79.0			60.2	122.7						
3200	32	45.1	90.2			66.5	135.3	51	27	M10			
3600	36	51.3	95.8	240	2800	68.0	138.5						
4200	42	59.9	99.8	230	2500	70.8	144.0						
4600	46	65.6	100.5	210	2300	72.7	147.8						
5000	50	71.3	99.8	185	2100	74.5	151.4						
5500	55	78.4	91.4	165	1750	76.7	155.9						
6000	60	85.5	99.8	150		78.7	160.4						

End pump size 2:

Displacement	Geometric displacement	Flow		Pressure Rated	Max. speed	Dimensions								
		at 1500 rpm	at max. rpm		n	A2	B2	Inlet			Outlet		
	[cm³/rev]	[l/min]	[l/min]	[bar]	[rpm]	[mm]	[mm]	E2	F2	d2	E2	F2	d2
450	4.5	6.14	14.33	250	3500	40.5	78	30	13.1	M6	30	13.1	M6
630	6.3	8.69	20.29			42	81						
820	8.2	11.32	26.40			43.5	83.9						
1000	10	13.95	32.55			45	87	40	19	M8		14.2	
1130	11.3	15.76	36.78			46	89.1						
1200	12	16.92	39.48			46.6	90.3						
1400	14	19.95	46.55			48	93.4						
1500	15	21.60	36.00		2500	49	95						
1600	16	23.04	38.40			50	96.6						
1900	19	27.36	45.60	200		52	101.5						
2200	22	31.68	42.24	180	2000	55	106.5						
2500	25	36.00	48.00	160		57.2	111.4				40	19	M8

PGE104-.../...-.FX1/1-N

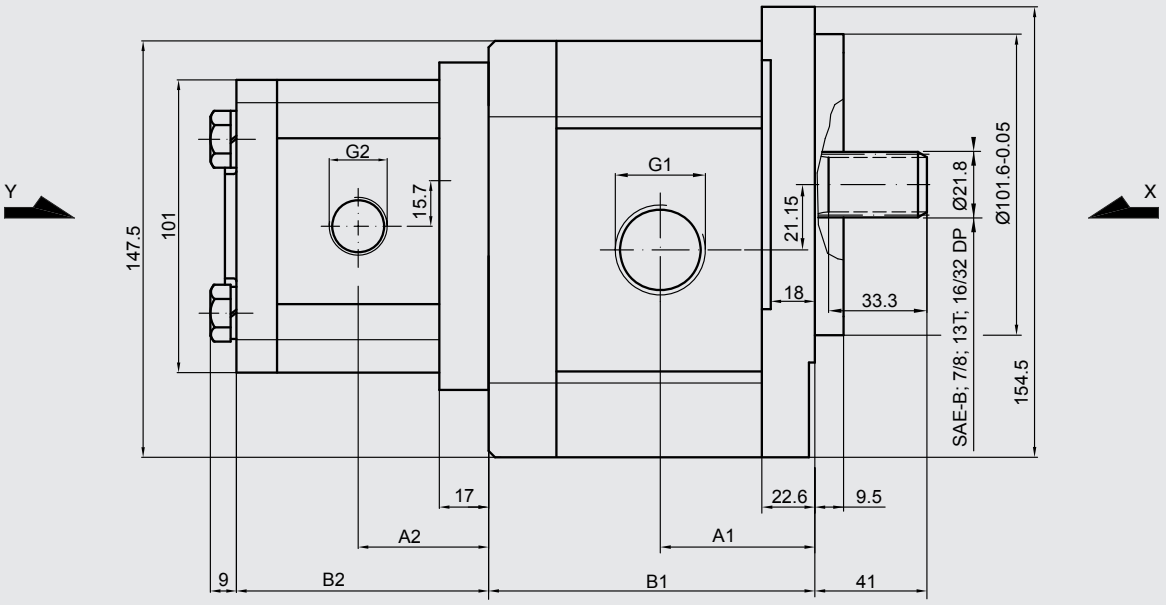

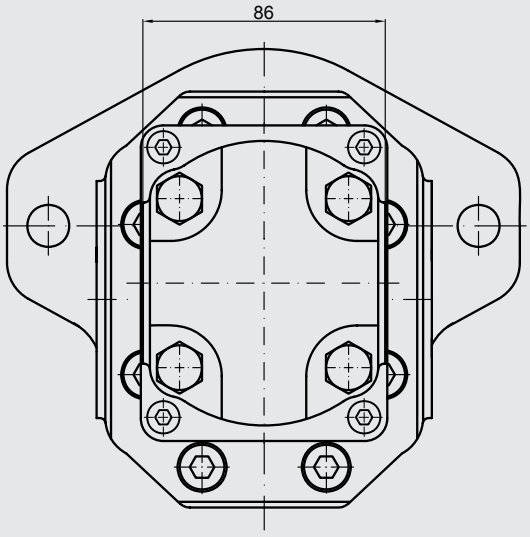

View Y

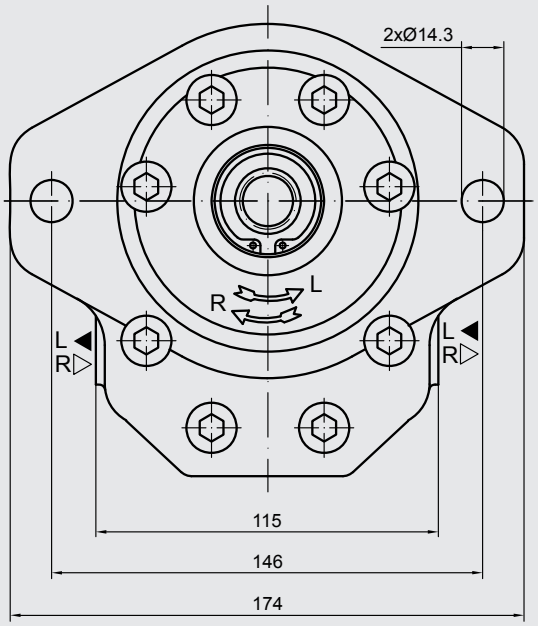

View X

Front pump size 3:

Displace-ment	Geometric displacement	Flow		Pressure Rated	Max. speed	Dimensions			
		at 1500 rpm	at max. rpm		n	A1	B1	Inlet	Outlet
	[cm³/rev]	[l/min]	[l/min]	[bar]	[rpm]	[mm]	[mm]	G1	G1
2000	20	28.2	56.4	250	3000	56.1	114.7	G 3/4	G 3/4
2250	22.5	31.7	63.5			57.6	117.7		
2500	25	35.3	70.5			58.3	119.1		
2800	28	39.5	79.0			60.2	122.7		
3200	32	45.1	90.2			66.5	135.3	G 1	
3600	36	51.3	95.8	240	2800	68.0	138.5		
4200	42	59.9	99.8	230	2500	70.8	144.0		
4600	46	65.6	100.5	210	2300	72.7	147.8		
5000	50	71.3	99.8	185	2100	74.5	151.4		
5500	55	78.4	91.4	165	1750	76.7	155.9		
6000	60	85.5	99.8	150		78.7	160.4		

End pump size 2:

Displace-ment	Geometric displacement	Flow		Pressure Rated	Max. speed	Dimensions			
		at 1500 rpm	at max. rpm		n	A2	B2	Inlet	Outlet
	[cm³/rev]	[l/min]	[l/min]	[bar]	[rpm]	[mm]	[mm]	G2	G2
450	4.5	6.14	14.33	250	3500	40.5	78	G 1/2	G 1/2
630	6.3	8.69	20.29			42	81		
820	8.2	11.32	26.40			43.5	83.9		
1000	10	13.95	32.55			45	87	G 3/4	
1130	11.3	15.76	36.78			46	89.1		
1200	12	16.92	39.48			46.6	90.3		
1400	14	19.95	46.55			48	93.4		
1500	15	21.60	36.00		2500	49	95		
1600	16	23.04	38.40			50	96.6		
1900	19	27.36	45.60	200		52	101.5		
2200	22	31.68	42.24	180	2000	55	106.5		
2500	25	36.00	48.00	160		57.2	111.4		

PGE104-.../...-.FX7/1-N

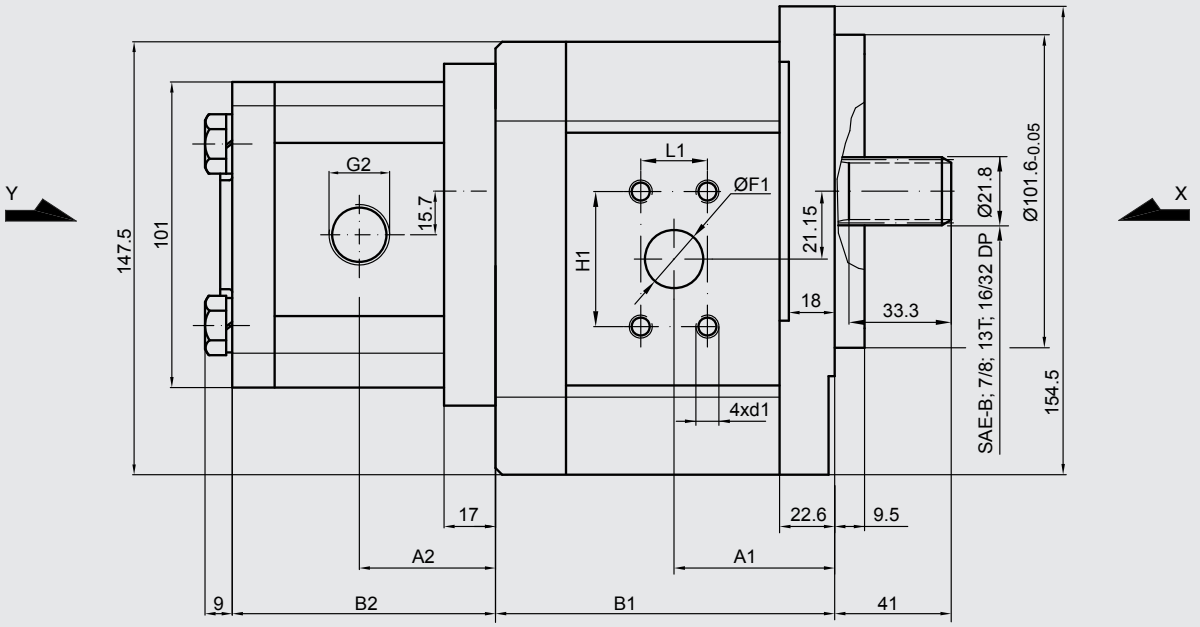

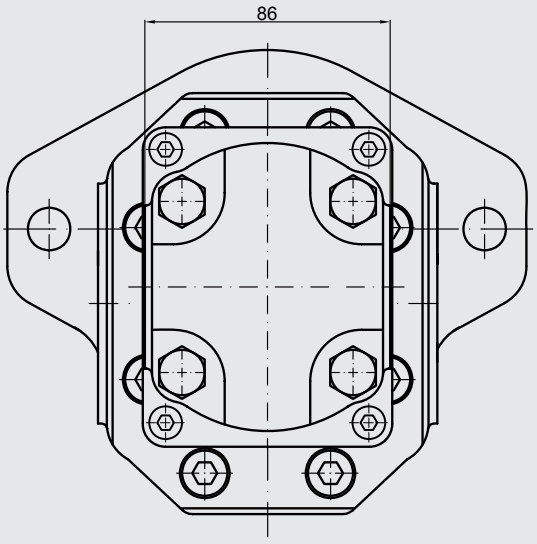

View Y

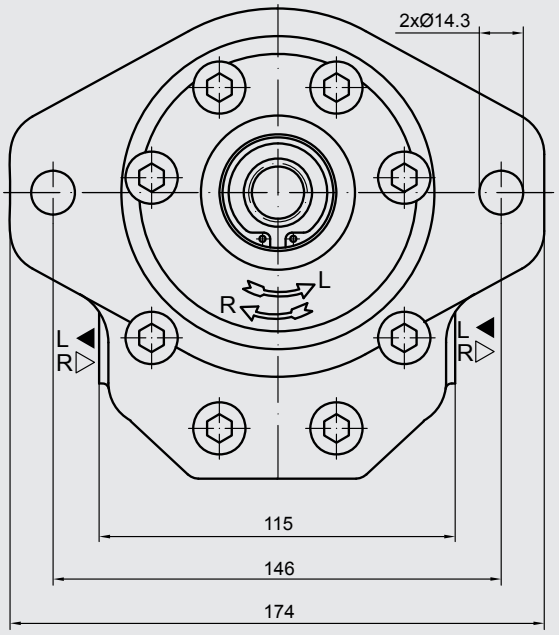

View X

Front pump size 3:

Displacement	Geometric displacement	Flow		Pressure Rated	Max. speed	Dimensions									
								Inlet				Outlet			
	[cm³/rev]	at 1500 rpm [l/min]	at max. rpm [l/min]	[bar]	n [rpm]	A1 [mm]	B1 [mm]	F1	d1	H1	L1	F1	d1	H1	L1
2000	20	28.2	56.4	250	3000	56.1	114.7	19	M10	47.6	22.2	19	M10	47.6	22.2
2250	22.5	31.7	63.5			57.6	117.7								
2500	25	35.3	70.5			58.3	119.1								
2800	28	39.5	79.0			60.2	122.7								
3200	32	45.1	90.2			66.5	135.3	27		52.4	26.2				
3600	36	51.3	95.8	240	2800	68.0	138.5								
4200	42	59.9	99.8	230	2500	70.8	144.0								
4600	46	65.6	100.5	210	2300	72.7	147.8								
5000	50	71.3	99.8	185	2100	74.5	151.4								
5500	55	78.4	91.4	165	1750	76.7	155.9								
6000	60	85.5	99.8	150		78.7	160.4								

End pump size 2:

Displacement	Geometric displacement	Flow		Pressure Rated	Max. speed	Dimensions			
								Inlet	Outlet
	[cm³/rev]	at 1500 rpm [l/min]	at max. rpm [l/min]	[bar]	n [rpm]	A2 [mm]	B2 [mm]	G2	G2
450	4.5	6.14	14.33	250	3500	40.5	78	G 1/2	G 1/2
630	6.3	8.69	20.29			42	81		
820	8.2	11.32	26.40			43.5	83.9		
1000	10	13.95	32.55			45	87	G 3/4	
1130	11.3	15.76	36.78			46	89.1		
1200	12	16.92	39.48			46.6	90.3		
1400	14	19.95	46.55			48	93.4		
1500	15	21.60	36.00		2500	49	95		
1600	16	23.04	38.40			50	96.6		
1900	19	27.36	45.60	200		52	101.5		
2200	22	31.68	42.24	180	2000	55	106.5		
2500	25	36.00	48.00	160		57.2	111.4		

6.5.29 Triple pump size 3 / size 3 / size 2

PGE104-.../.../...-.BS4/4/4-N

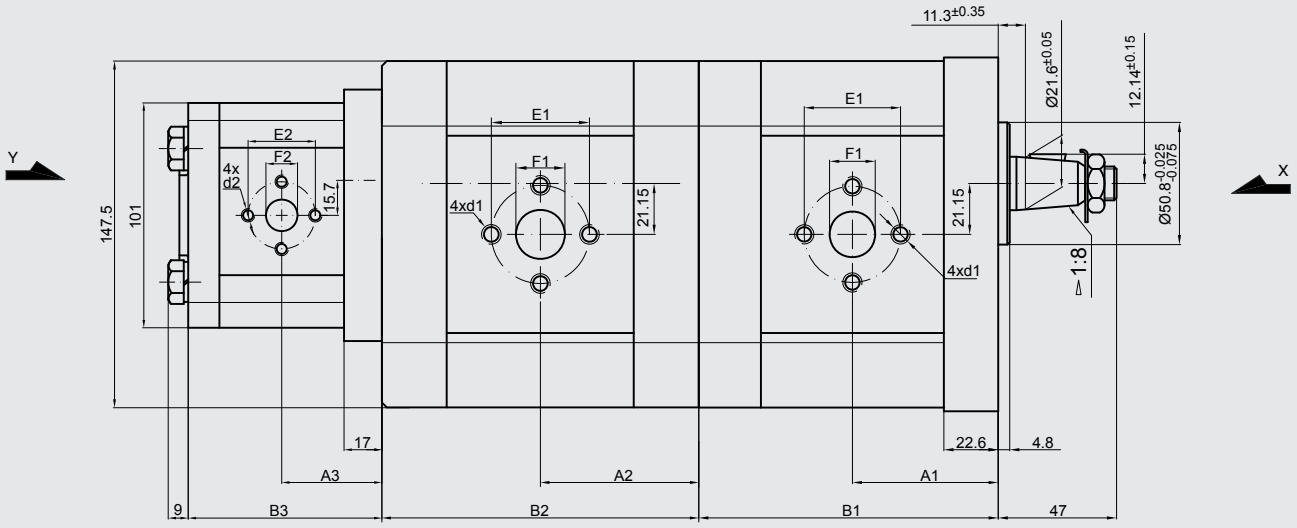

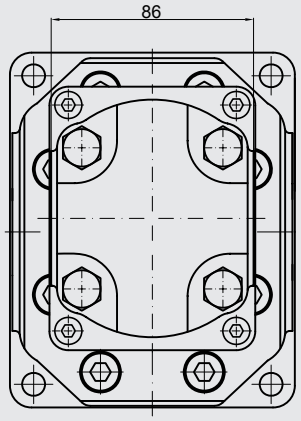

View Y

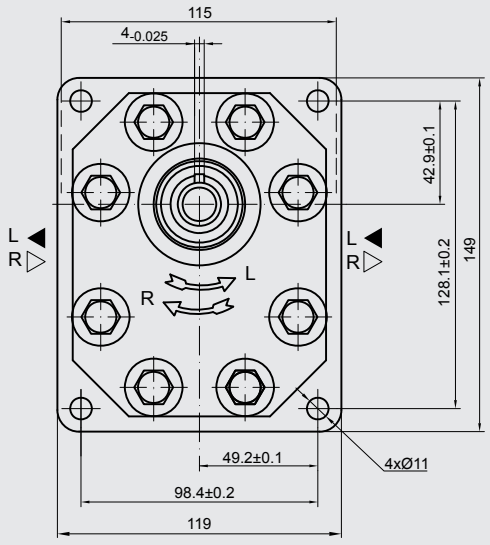

View X

Front and middle pump size 3:

Displacement	Geometric displacement	Flow		Pressure Rated	Max. speed
		at 1500 rpm	at max. rpm		n
	[cm³/rev]	[l/min]	[l/min]	[bar]	[rpm]
2000	20	28.2	56.4	250	3000
2250	22.5	31.7	63.5		
2500	25	35.3	70.5		
2800	28	39.5	79.0		
3200	32	45.1	90.2		
3600	36	51.3	95.8	240	2800
4200	42	59.9	99.8	230	2500
4600	46	65.6	100.5	210	2300
5000	50	71.3	99.8	185	2100
5500	55	78.4	91.4	165	1750
6000	60	85.5	99.8	150	

Displacement	Dimensions									
	A1	B1	A2	B2	Inlet			Outlet		
	[mm]	[mm]	[mm]	[mm]	E1	F1	d1	E1	F1	d1
2000	56.1	114.7	58.5	117.1	40	19	M8	40	19	M8
2250	57.6	117.7	60.0	120.1						
2500	58.3	119.1	60.8	121.5						
2800	60.2	122.7	62.5	125.1						
3200	66.5	135.3	68.8	137.7	51	27	M10			
3600	68.0	138.5	70.5	140.9						
4200	70.8	144.0	73.2	146.5						
4600	72.7	147.8	75.1	150.2						
5000	74.5	151.4	76.9	153.8						
5500	76.7	155.9	79.1	158.3						
6000	78.7	160.4	81.4	162.8						

End pump size 2:

Displacement	Geometric displacement	Flow		Pressure Rated	Max. speed	Dimensions								
		at 1500 rpm	at max. rpm		n	A3	B3	Inlet			Outlet		
	[cm³/rev]	[l/min]	[l/min]	[bar]	[rpm]	[mm]	[mm]	E2	F2	d2	E2	F2	d2
450	4.5	6.14	14.33	250	3500	40.5	78	30	13.1	M6	30	13.1	M6
630	6.3	8.69	20.29			42	81						
820	8.2	11.32	26.40			43.5	83.9						
1000	10	13.95	32.55			45	87	40	19	M8		14.2	
1130	11.3	15.76	36.78			46	89.1						
1200	12	16.92	39.48			46.6	90.3						
1400	14	19.95	46.55			48	93.4						
1500	15	21.60	36.00		2500	49	95						
1600	16	23.04	38.40			50	96.6						
1900	19	27.36	45.60	200		52	101.5						
2200	22	31.68	42.24	180	2000	55	106.5						
2500	25	36.00	48.00	160		57.2	111.4				40	19	M8

PGE104-.../.../...-.BS1/1/1-N

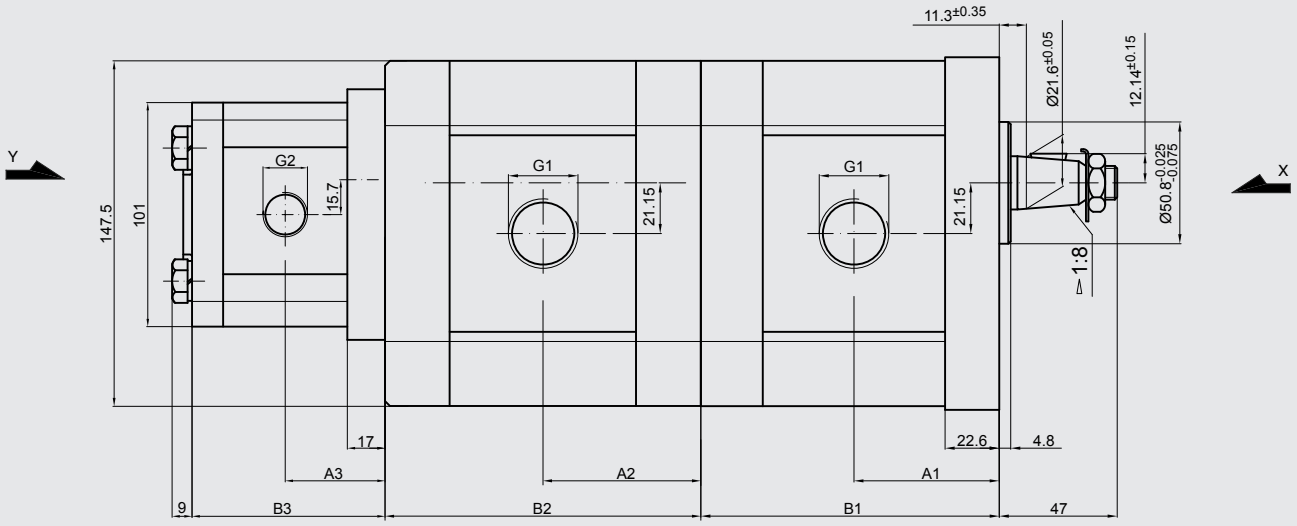

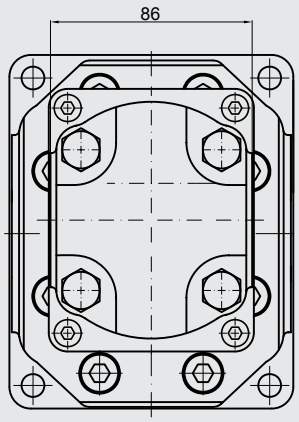

View Y

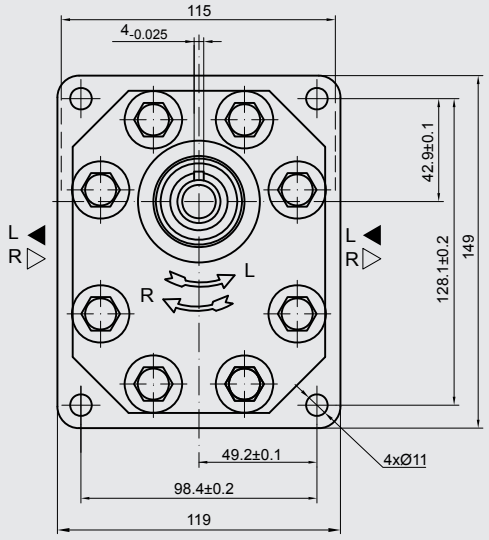

View X

Front and middle pump size 3:

Displacement	Geometric displacement	Flow		Pressure Rated	Max. speed
		at 1500 rpm	at max. rpm		n
	[cm³/rev]	[l/min]	[l/min]	[bar]	[rpm]
2000	20	28.2	56.4	250	3000
2250	22.5	31.7	63.5		
2500	25	35.3	70.5		
2800	28	39.5	79.0		
3200	32	45.1	90.2		
3600	36	51.3	95.8	240	2800
4200	42	59.9	99.8	230	2500
4600	46	65.6	100.5	210	2300
5000	50	71.3	99.8	185	2100
5500	55	78.4	91.4	165	1750
6000	60	85.5	99.8	150	

Displacement	Dimensions					
	A1 [mm]	B1 [mm]	A2 [mm]	B2 [mm]	Inlet G1	Outlet G1
2000	56.1	114.7	58.5	117.1	G 3/4	G 3/4
2250	57.6	117.7	60.0	120.1		
2500	58.3	119.1	60.8	121.5		
2800	60.2	122.7	62.5	125.1		
3200	66.5	135.3	68.8	137.7	G 1	
3600	68.0	138.5	70.5	140.9		
4200	70.8	144.0	73.2	146.5		
4600	72.7	147.8	75.1	150.2		
5000	74.5	151.4	76.9	153.8		
5500	76.7	155.9	79.1	158.3		
6000	78.7	160.4	81.4	162.8		

End pump size 2:

Displacement	Geometric displacement	Flow		Pressure Rated	Max. speed	Dimensions			
		at 1500 rpm	at max. rpm		n	A3	B3	Inlet	Outlet
	[cm³/rev]	[l/min]	[l/min]	[bar]	[rpm]	[mm]	[mm]	G2	G2
450	4.5	6.14	14.33	250	3500	40.5	78	G 1/2	G 1/2
630	6.3	8.69	20.29			42	81		
820	8.2	11.32	26.40			43.5	83.9		
1000	10	13.95	32.55			45	87	G 3/4	
1130	11.3	15.76	36.78			46	89.1		
1200	12	16.92	39.48			46.6	90.3		
1400	14	19.95	46.55			48	93.4		
1500	15	21.60	36.00		2500	49	95		
1600	16	23.04	38.40			50	96.6		
1900	19	27.36	45.60	200		52	101.5		
2200	22	31.68	42.24	180	2000	55	106.5		
2500	25	36.00	48.00	160		57.2	111.4		

PGE104-.../.../...-.FX4/4/4-N

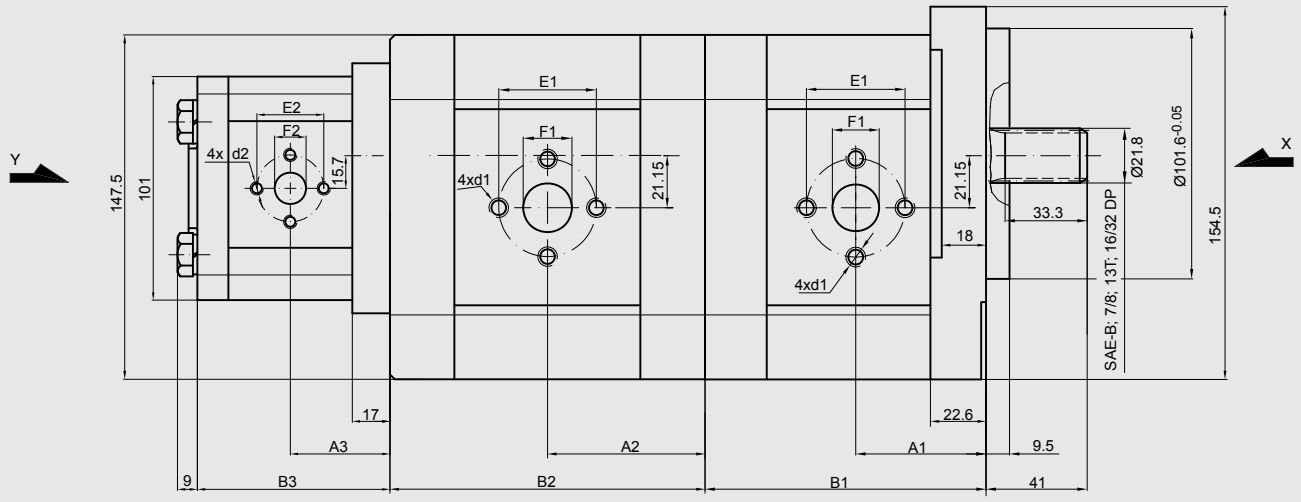

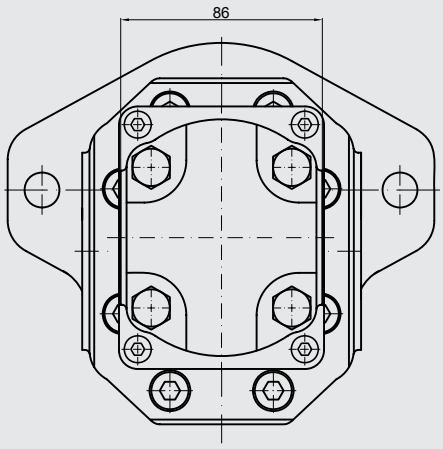

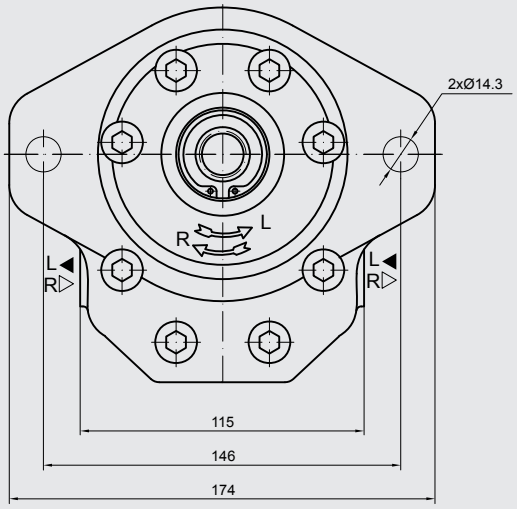

View Y

View X

Front and middle pump size 3:

Displacement	Geometric displacement	Flow		Pressure Rated	Max. speed
	[cm³/rev]	at 1500 rpm [l/min]	at max. rpm [l/min]	[bar]	n [rpm]
2000	20	28.2	56.4	250	3000
2250	22.5	31.7	63.5		
2500	25	35.3	70.5		
2800	28	39.5	79.0		
3200	32	45.1	90.2		
3600	36	51.3	95.8	240	2800
4200	42	59.9	99.8	230	2500
4600	46	65.6	100.5	210	2300
5000	50	71.3	99.8	185	2100
5500	55	78.4	91.4	165	1750
6000	60	85.5	99.8	150	

Displacement	Dimensions									
	A1 [mm]	B1 [mm]	A2 [mm]	B2 [mm]	Inlet E1	Inlet F1	Inlet d1	Outlet E1	Outlet F1	Outlet d1
2000	56.1	114.7	58.5	117.1	40	19	M8	40	19	M8
2250	57.6	117.7	60.0	120.1						
2500	58.3	119.1	60.8	121.5						
2800	60.2	122.7	62.5	125.1						
3200	66.5	135.3	68.8	137.7	51	27	M10			
3600	68.0	138.5	70.5	140.9						
4200	70.8	144.0	73.2	146.5						
4600	72.7	147.8	75.1	150.2						
5000	74.5	151.4	76.9	153.8						
5500	76.7	155.9	79.1	158.3						
6000	78.7	160.4	81.4	162.8						

End pump size 2:

Displacement	Geometric displacement	Flow		Pressure Rated	Max. speed	Dimensions								
								Inlet			Outlet		
	[cm³/rev]	at 1500 rpm [l/min]	at max. rpm [l/min]	[bar]	n [rpm]	A3 [mm]	B3 [mm]	E2	F2	d2	E2	F2	d2
450	4.5	6.14	14.33	250	3500	40.5	78	30	13.1	M6	30	13.1	M6
630	6.3	8.69	20.29			42	81						
820	8.2	11.32	26.40			43.5	83.9						
1000	10	13.95	32.55			45	87	40	19	M8		14.2	
1130	11.3	15.76	36.78			46	89.1						
1200	12	16.92	39.48			46.6	90.3						
1400	14	19.95	46.55			48	93.4						
1500	15	21.60	36.00		2500	49	95						
1600	16	23.04	38.40			50	96.6						
1900	19	27.36	45.60	200		52	101.5						
2200	22	31.68	42.24	180	2000	55	106.5						
2500	25	36.00	48.00	160		57.2	111.4				40	19	M8

PGE104-.../.../...-.FX1/1/1-N

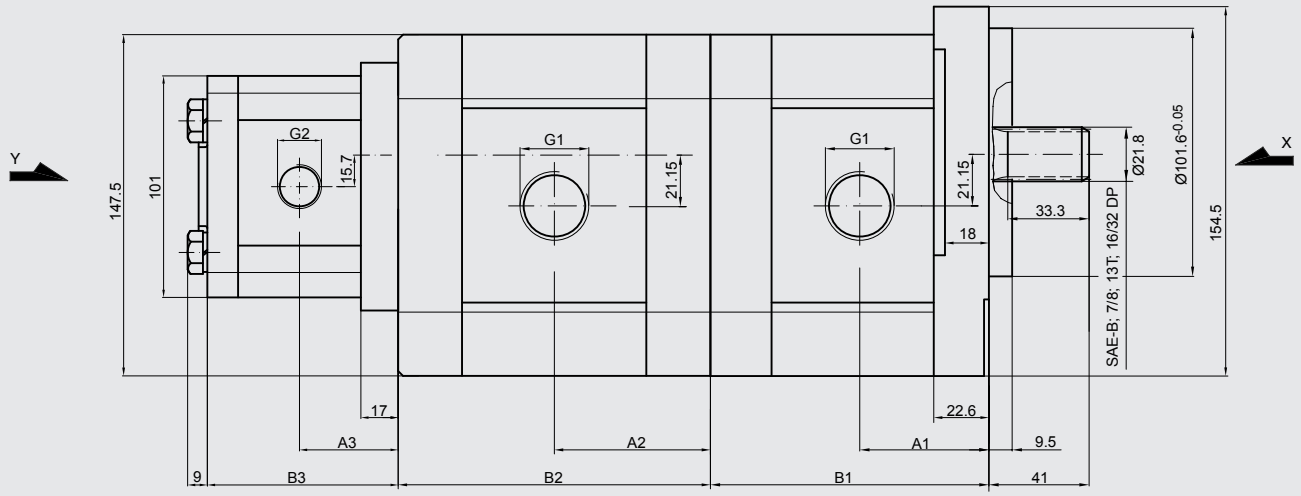

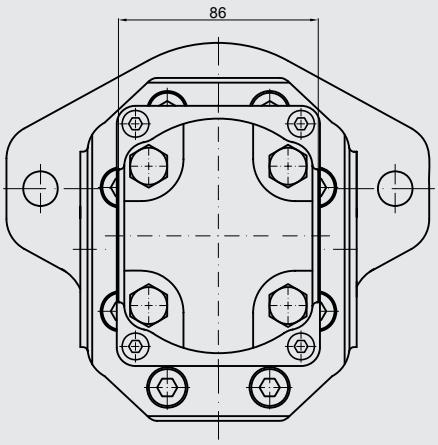

View Y

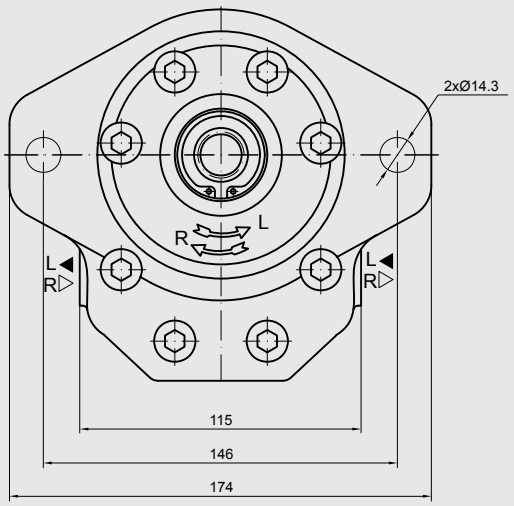

View X

Front and middle pump size 3:

Displacement	Geometric displacement	Flow		Pressure Rated	Max. speed
	[cm³/rev]	at 1500 rpm [l/min]	at max. rpm [l/min]	[bar]	n [rpm]
2000	20	28.2	56.4	250	3000
2250	22.5	31.7	63.5		
2500	25	35.3	70.5		
2800	28	39.5	79.0		
3200	32	45.1	90.2		
3600	36	51.3	95.8	240	2800
4200	42	59.9	99.8	230	2500
4600	46	65.6	100.5	210	2300
5000	50	71.3	99.8	185	2100
5500	55	78.4	91.4	165	1750
6000	60	85.5	99.8	150	

Displacement	Dimensions					
	A1 [mm]	B1 [mm]	A2 [mm]	B2 [mm]	Inlet G1	Outlet G1
2000	56.1	114.7	58.5	117.1	G 3/4	G 3/4
2250	57.6	117.7	60.0	120.1		
2500	58.3	119.1	60.8	121.5		
2800	60.2	122.7	62.5	125.1		
3200	66.5	135.3	68.8	137.7	G 1	
3600	68.0	138.5	70.5	140.9		
4200	70.8	144.0	73.2	146.5		
4600	72.7	147.8	75.1	150.2		
5000	74.5	151.4	76.9	153.8		
5500	76.7	155.9	79.1	158.3		
6000	78.7	160.4	81.4	162.8		

End pump size 2:

Displacement	Geometric displacement	Flow		Pressure Rated	Max. speed	Dimensions			
	[cm³/rev]	at 1500 rpm [l/min]	at max. rpm [l/min]	[bar]	n [rpm]	A3 [mm]	B3 [mm]	Inlet G2	Outlet G2
450	4.5	6.14	14.33	250	3500	40.5	78	G 1/2	G 1/2
630	6.3	8.69	20.29			42	81		
820	8.2	11.32	26.40			43.5	83.9		
1000	10	13.95	32.55			45	87		
1130	11.3	15.76	36.78			46	89.1	G 3/4	
1200	12	16.92	39.48			46.6	90.3		
1400	14	19.95	46.55			48	93.4		
1500	15	21.60	36.00		2500	49	95		
1600	16	23.04	38.40			50	96.6		
1900	19	27.36	45.60	200		52	101.5		
2200	22	31.68	42.24	180	2000	55	106.5		
2500	25	36.00	48.00	160		57.2	111.4		

6.5.30 Triple pump size 3 / size 2 / size 2

PGE104-.../.../...-.BS4/4/4-N

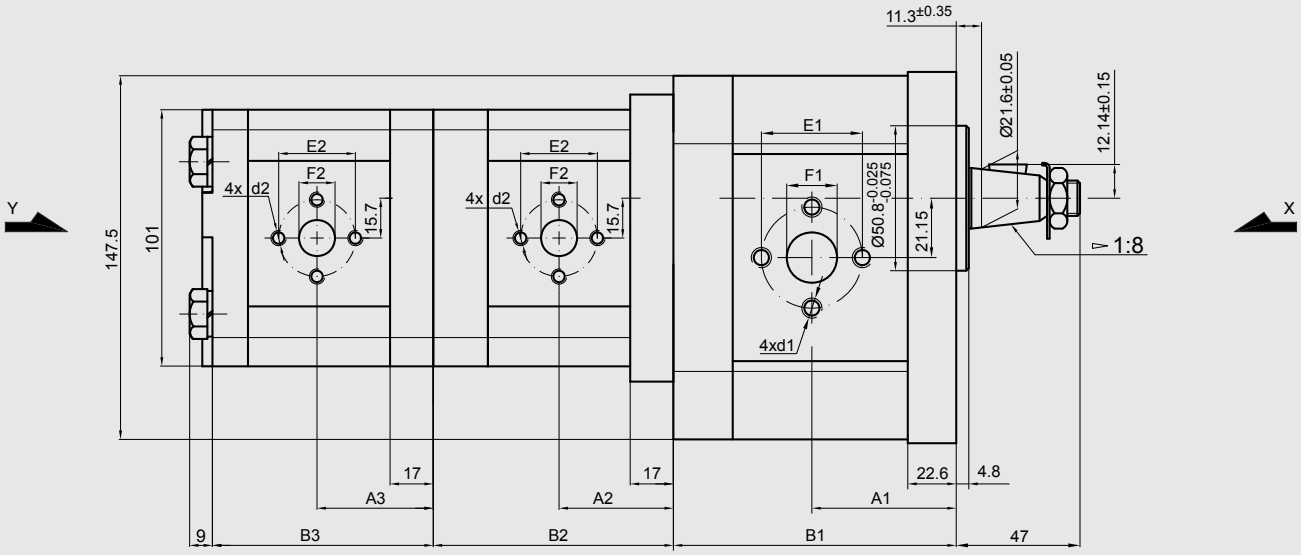

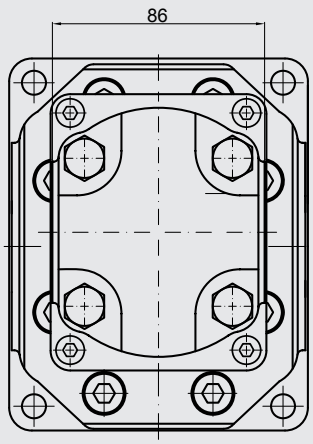

View Y

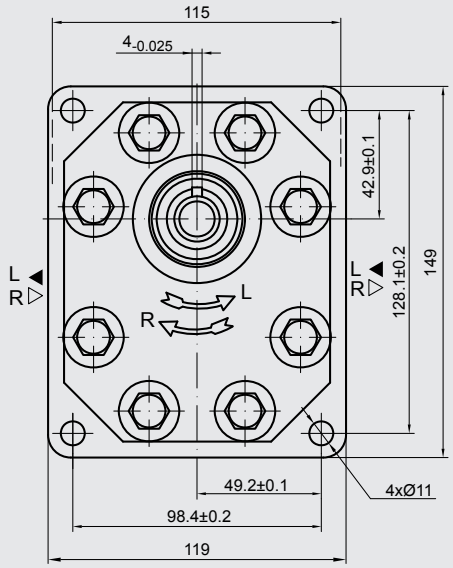

View X

Front pump size 3:

Displacement	Geometric displacement	Flow		Pressure Rated	Max. speed	Dimensions								
		at 1500 rpm	at max. rpm		n	A1	B1	Inlet			Outlet		
	[cm³/rev]	[l/min]	[l/min]	[bar]	[rpm]	[mm]	[mm]	E1	F1	d1	E1	F1	d1
2000	20	28.2	56.4	250	3000	56.1	114.7	40	19	M8	40	19	M8
2250	22.5	31.7	63.5			57.6	117.7						
2500	25	35.3	70.5			58.3	119.1						
2800	28	39.5	79.0			60.2	122.7						
3200	32	45.1	90.2			66.5	135.3	51	27	M10			
3600	36	51.3	95.8	240	2800	68.0	138.5						
4200	42	59.9	99.8	230	2500	70.8	144.0						
4600	46	65.6	100.5	210	2300	72.7	147.8						
5000	50	71.3	99.8	185	2100	74.5	151.4						
5500	55	78.4	91.4	165	1750	76.7	155.9						
6000	60	85.5	99.8	150		78.7	160.4						

Middle and end pump size 2:

Displacement	Geometric displacement	Flow		Pressure Rated	Max. speed
		at 1500 rpm	at max. rpm		n
	[cm³/rev]	[l/min]	[l/min]	[bar]	[rpm]
450	4.5	6.14	14.33	250	3500
630	6.3	8.69	20.29		
820	8.2	11.32	26.40		
1000	10	13.95	32.55		
1130	11.3	15.76	36.78		
1200	12	16.92	39.48		
1400	14	19.95	46.55		
1500	15	21.60	36.00		2500
1600	16	23.04	38.40		
1900	19	27.36	45.60	200	
2200	22	31.68	42.24	180	2000
2500	25	36.00	48.00	160	

Displacement	Dimensions									
	A2	B2	A3	B3	Inlet			Outlet		
	[mm]	[mm]	[mm]	[mm]	E2	F2	d2	E2	F2	d2
450	40.5	78	40.5	85.2	30	13.1	M6	30	13.1	M6
630	42	81	42	88.2						
820	43.5	83.9	43.5	91.1						
1000	45	87	45	94.2	40	19	M8		14.2	
1130	46	89.1	46	96.3						
1200	46.6	90.3	46.6	97.5						
1400	48	93.4	48	100.6						
1500	49	95	49	102.1						
1600	50	96.6	50	103.8						
1900	52	101.5	52	108.7						
2200	55	106.5	55	113.7						
2500	57.2	111.4	57.2	118.6				40	19	M8

PGE104-.../.../...-.BS1/1/1-N

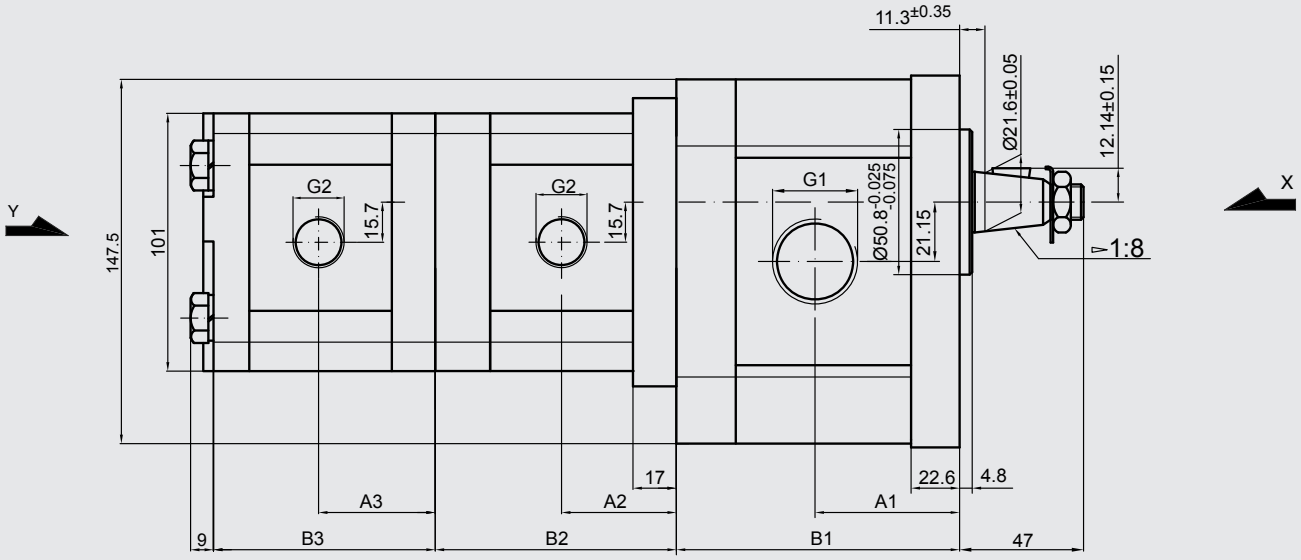

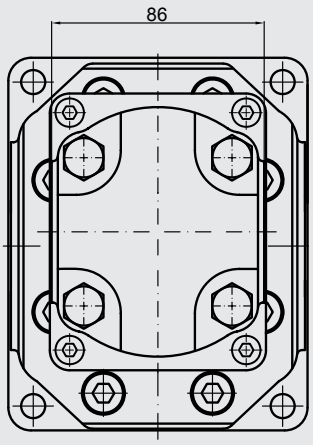

View Y

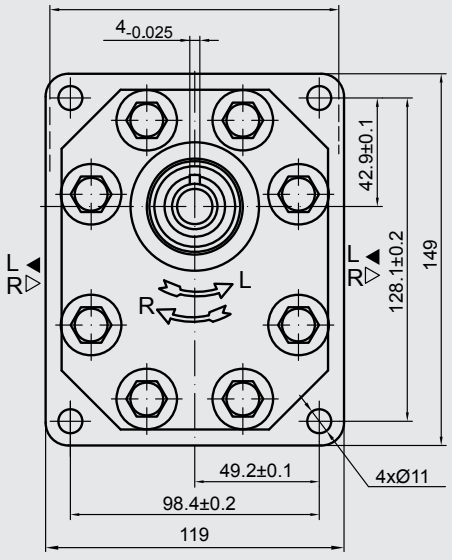

View X

Front pump size 3:

Displacement	Geometric displacement	Flow		Pressure Rated	Max. speed	Dimensions			
		at 1500 rpm	at max. rpm					Inlet	Outlet
	[cm³/rev]	[l/min]	[l/min]	[bar]	n [rpm]	A1 [mm]	B1 [mm]	G1	G1
2000	20	28.2	56.4	250	3000	56.1	114.7	G 3/4	G 3/4
2250	22.5	31.7	63.5			57.6	117.7		
2500	25	35.3	70.5			58.3	119.1		
2800	28	39.5	79.0			60.2	122.7		
3200	32	45.1	90.2			66.5	135.3	G 1	
3600	36	51.3	95.8	240	2800	68.0	138.5		
4200	42	59.9	99.8	230	2500	70.8	144.0		
4600	46	65.6	100.5	210	2300	72.7	147.8		
5000	50	71.3	99.8	185	2100	74.5	151.4		
5500	55	78.4	91.4	165	1750	76.7	155.9		
6000	60	85.5	99.8	150		78.7	160.4		

Middle and end pump size 2:

Displacement	Geometric displacement	Flow		Pressure Rated	Max. speed
		at 1500 rpm	at max. rpm		
	[cm³/rev]	[l/min]	[l/min]	[bar]	n [rpm]
450	4.5	6.14	14.33	250	3500
630	6.3	8.69	20.29		
820	8.2	11.32	26.40		
1000	10	13.95	32.55		
1130	11.3	15.76	36.78		
1200	12	16.92	39.48		
1400	14	19.95	46.55		
1500	15	21.60	36.00		2500
1600	16	23.04	38.40		
1900	19	27.36	45.60	200	
2200	22	31.68	42.24	180	2000
2500	25	36.00	48.00	160	

Displacement	Dimensions					
	A2 [mm]	B2 [mm]	A3 [mm]	B3 [mm]	Inlet G2	Outlet G2
450	40.5	85.2	40.5	78	G 1/2	G 1/2
630	42	88.2	42	81		
820	43.5	91.1	43.5	83.9		
1000	45	94.2	45	87	G 3/4	
1130	46	96.3	46	89		
1200	46.6	97.5	46.6	90.3		
1400	48	100.6	48	93.4		
1500	49	102.1	49	95		
1600	50	103.8	50	96.5		
1900	52	108.7	52	101.5		
2200	55	113.7	55	106.5		
2500	57.2	118.6	57.2	111.4		

PGE104-.../.../...-.FX4/4/4-N

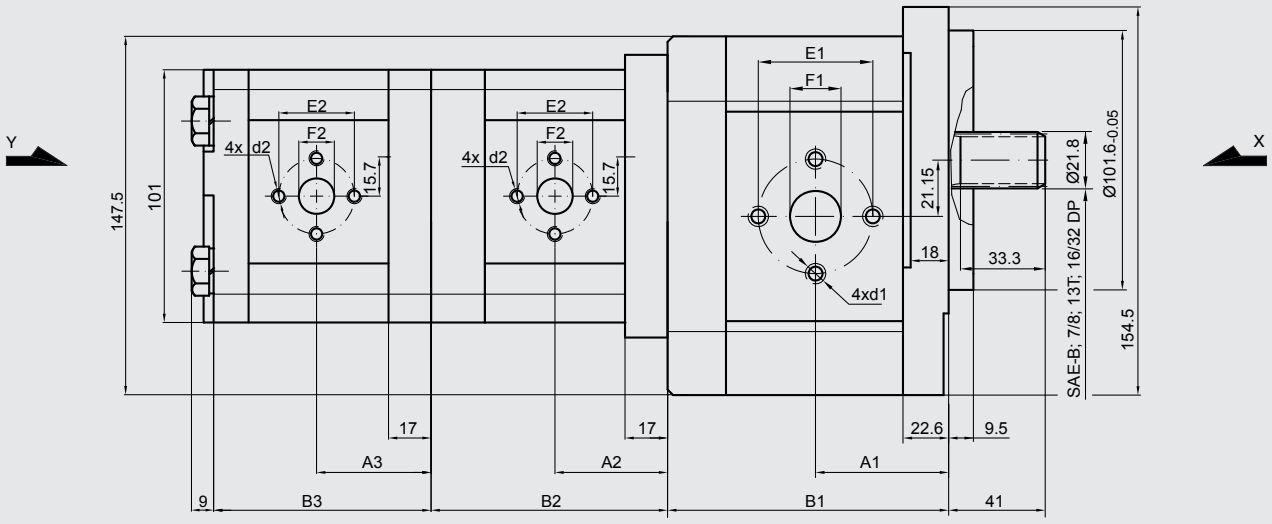

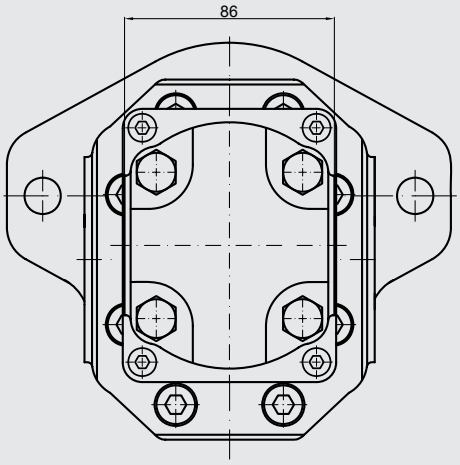

View Y

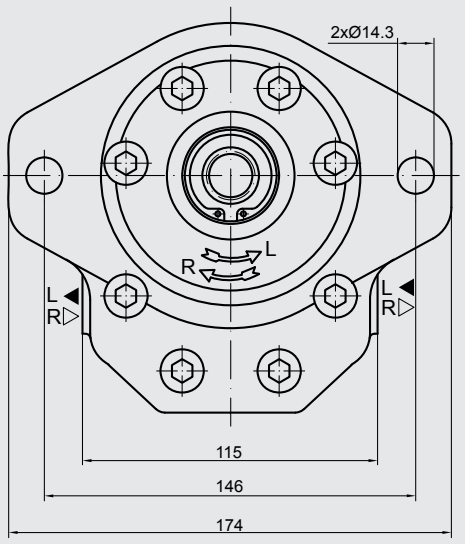

View X

Front pump size 3:

Displacement	Geometric displacement	Flow		Pressure Rated	Max. speed	Dimensions								
								Inlet			Outlet		
	[cm³/rev]	at 1500 rpm [l/min]	at max. rpm [l/min]	[bar]	n [rpm]	A1 [mm]	B1 [mm]	E1	F1	d1	E1	F1	d1
2000	20	28.2	56.4	250	3000	56.1	114.7	40	19	M8	40	19	M8
2250	22.5	31.7	63.5			57.6	117.7						
2500	25	35.3	70.5			58.3	119.1						
2800	28	39.5	79.0			60.2	122.7						
3200	32	45.1	90.2			66.5	135.3	51	27	M10			
3600	36	51.3	95.8	240	2800	68.0	138.5						
4200	42	59.9	99.8	230	2500	70.8	144.0						
4600	46	65.6	100.5	210	2300	72.7	147.8						
5000	50	71.3	99.8	185	2100	74.5	151.4						
5500	55	78.4	91.4	165	1750	76.7	155.9						
6000	60	85.5	99.8	150		78.7	160.4						

Middle and end pump size 2:

Displacement	Geometric displacement	Flow		Pressure Rated	Max. speed
		at 1500 rpm	at max. rpm		
	[cm³/rev]	[l/min]	[l/min]	[bar]	n [rpm]
450	4.5	6.14	14.33	250	3500
630	6.3	8.69	20.29		
820	8.2	11.32	26.40		
1000	10	13.95	32.55		
1130	11.3	15.76	36.78		
1200	12	16.92	39.48		
1400	14	19.95	46.55		
1500	15	21.60	36.00		2500
1600	16	23.04	38.40		
1900	19	27.36	45.60	200	
2200	22	31.68	42.24	180	2000
2500	25	36.00	48.00	160	

Displacement	Dimensions									
					Inlet			Outlet		
	A2 [mm]	B2 [mm]	A3 [mm]	B3 [mm]	E2	F2	d2	E2	F2	d2
450	40.5	85.2	40.5	78	30	13.1	M6	30	13.1	M6
630	42	88.2	42	81						
820	43.5	91.1	43.5	83.9						
1000	45	94.2	45	87	40	19	M8		14.2	
1130	46	96.3	46	89						
1200	46.6	97.5	46.6	90.3						
1400	48	100.6	48	93.4						
1500	49	102.1	49	95						
1600	50	103.8	50	96.6						
1900	52	108.7	52	101.5						
2200	55	113.7	55	106.5						
2500	57.2	118.6	57.2	111.4				40	19	M8

PGE104-.../.../...-.FX1/1/1-N

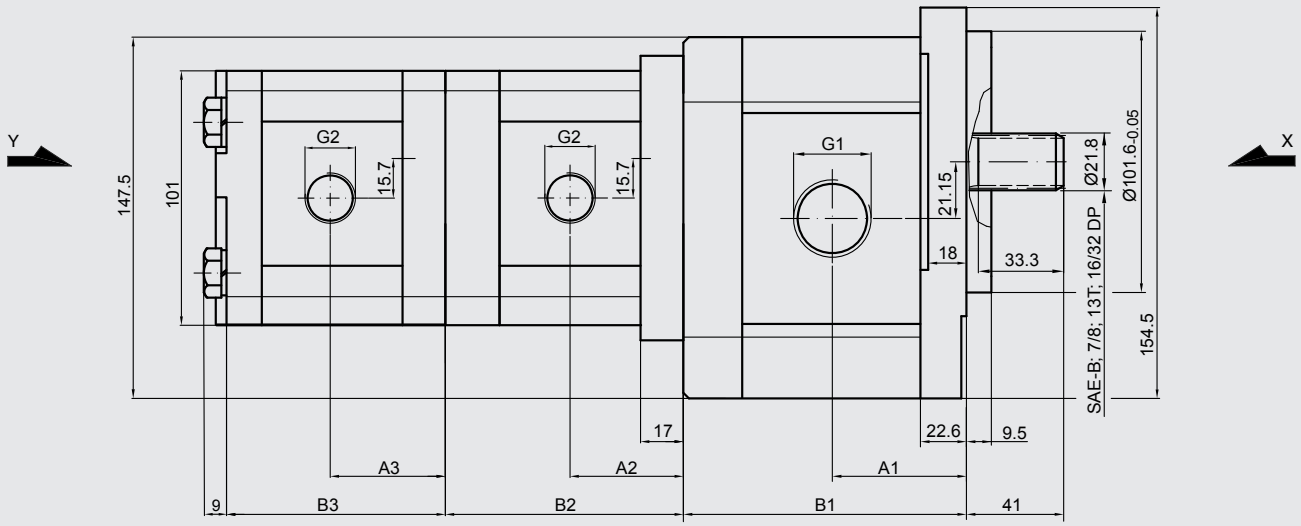

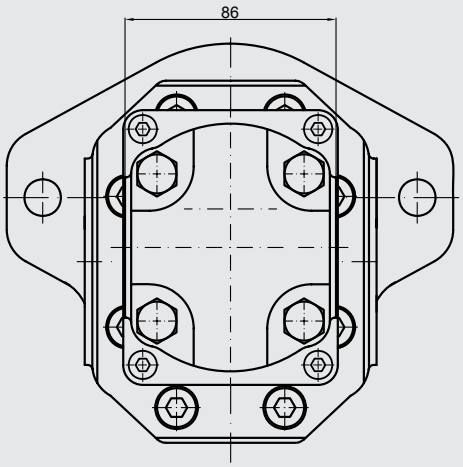

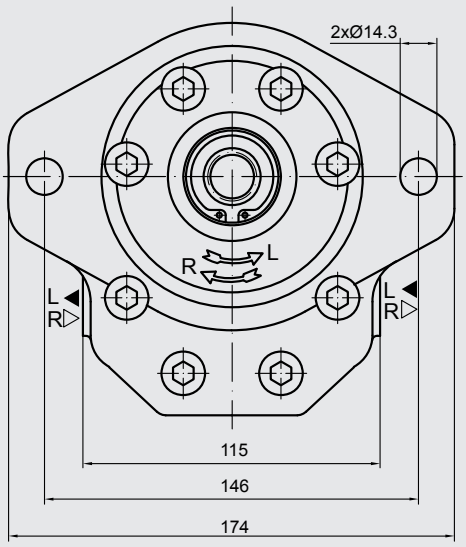

View Y

View X

Front pump size 3:

Displacement	Geometric displacement	Flow		Pressure Rated	Max. speed	Dimensions			
		at 1500 rpm	at max. rpm					Inlet	Outlet
	[cm³/rev]	[l/min]	[l/min]	[bar]	n [rpm]	A1 [mm]	B1 [mm]	G1	G1
2000	20	28.2	56.4	250	3000	56.1	114.7	G 3/4	G 3/4
2250	22.5	31.7	63.5			57.6	117.7		
2500	25	35.3	70.5			58.3	119.1		
2800	28	39.5	79.0			60.2	122.7		
3200	32	45.1	90.2			66.5	135.3	G 1	
3600	36	51.3	95.8	240	2800	68.0	138.5		
4200	42	59.9	99.8	230	2500	70.8	144.0		
4600	46	65.6	100.5	210	2300	72.7	147.8		
5000	50	71.3	99.8	185	2100	74.5	151.4		
5500	55	78.4	91.4	165	1750	76.7	155.9		
6000	60	85.5	99.8	150		78.7	160.4		

Middle and end pump size 2:

Displacement	Geometric displacement	Flow		Pressure Rated	Max. speed
		at 1500 rpm	at max. rpm		
	[cm³/rev]	[l/min]	[l/min]	[bar]	n [rpm]
450	4.5	6.14	14.33	250	3500
630	6.3	8.69	20.29		
820	8.2	11.32	26.40		
1000	10	13.95	32.55		
1130	11.3	15.76	36.78		
1200	12	16.92	39.48		
1400	14	19.95	46.55		
1500	15	21.60	36.00		2500
1600	16	23.04	38.40		
1900	19	27.36	45.60	200	
2200	22	31.68	42.24	180	2000
2500	25	36.00	48.00	160	

Displacement	Dimensions					
	A2 [mm]	B2 [mm]	A3 [mm]	B3 [mm]	Inlet G2	Outlet G2
450	40.5	85.2	40.5	78	G 1/2	G 1/2
630	42	88.2	42	81		
820	43.5	91.1	43.5	83.9		
1000	45	94.2	45	87	G 3/4	
1130	46	96.3	46	89		
1200	46.6	97.5	46.5	90.3		
1400	48	100.6	48	93.4		
1500	49	102.1	49	95		
1600	50	103.8	50	96.5		
1900	52	108.7	52	101.5		
2200	55	113.7	55	106.5		
2500	57.2	118.6	57.2	111.4		

6.5.31 Double pump size 3 / size 1

PGE104-.../...-.BS4/4-N

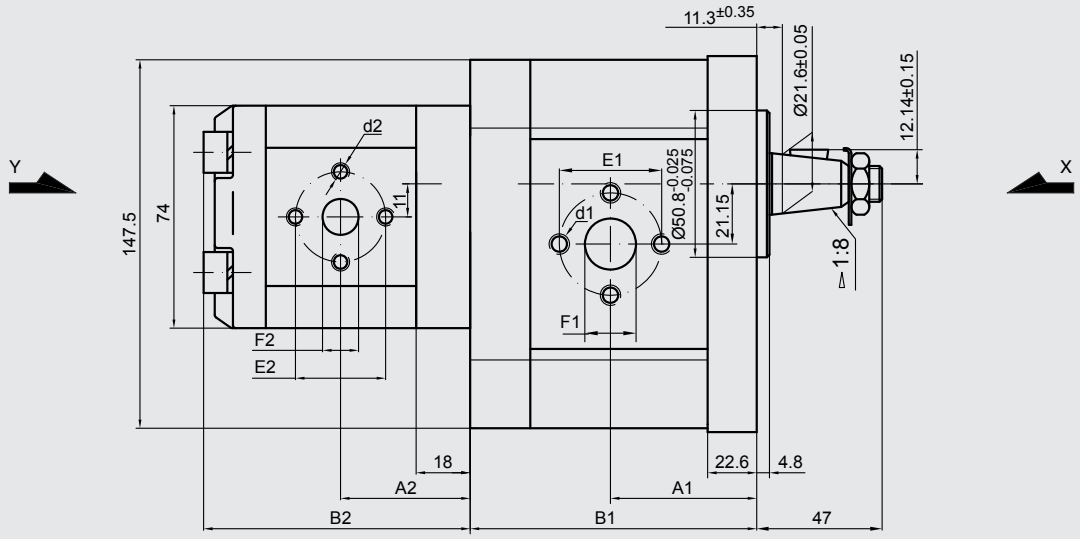

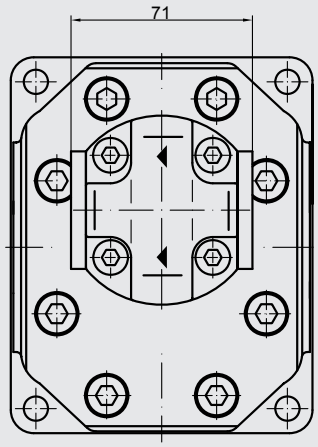

View Y

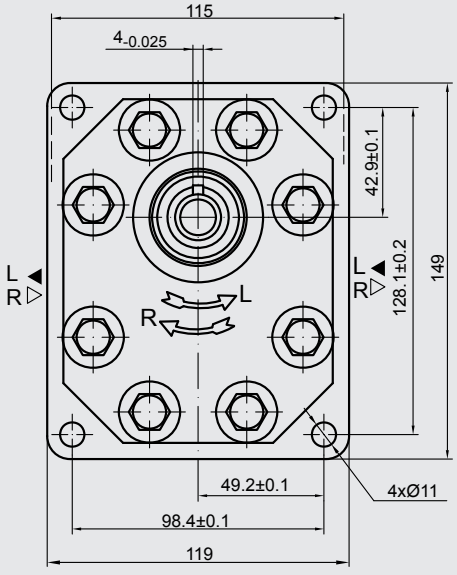

View X

Front pump size 3:

Displacement	Geometric displacement	Flow		Pressure Rated	Max. speed	Dimensions								
		at 1500 rpm	at max. rpm					Inlet			Outlet		
	[cm³/rev]	[l/min]	[l/min]	[bar]	n [rpm]	A1 [mm]	B1 [mm]	E1	F1	d1	E1	F1	d1
2000	20	28.2	56.4	250	3000	56.1	117.2	40	19	M8	40	19	M8
2250	22.5	31.7	63.5			57.6	120.2						
2500	25	35.3	70.5			58.3	121.6						
2800	28	39.5	79.0			60.2	125.2						
3200	32	45.1	90.2			66.5	137.8	51	27	M10			
3600	36	51.3	95.8	240	2800	68.0	141.0						
4200	42	59.9	99.8	230	2500	70.8	146.5						
4600	46	65.6	100.5	210	2300	72.7	150.3						
5000	50	71.3	99.8	185	2100	74.5	153.9						
5500	55	78.4	91.4	165	1750	76.7	158.4						
6000	60	85.5	99.8	150		78.7	162.9						

End pump size 1:

Displacement	Geometric displacement	Flow		Pressure Rated	Max. speed	Dimensions								
		at 1500 rpm	at max. rpm					Inlet			Outlet		
	[cm³/rev]	[l/min]	[l/min]	[bar]	n [rpm]	A2 [mm]	B2 [mm]	E2	F2	d2	E2	F2	d2
100	1	1.40	3.26	250	3500	39.1	81	30	12	M6	30	12	M6
125	1.25	1.74	4.07			39.5	82						
160	1.6	2.23	5.21			40.3	83.6						
200	2	2.82	6.58			41.1	85.2						
250	2.5	3.53	8.23			42.1	87.2						
315	3.15	4.44	10.36			43.5	89.8						
365	3.65	5.15	12.01			44.4	91.9						
420	4.2	5.92	13.82			45.5	94.1						
500	5	7.05	14.10		3000	47.1	97.2						
610	6.1	8.69	14.49	200	2500	49.4	101.8						
740	7.4	10.55	17.58	170		52.1	107.2						

PGE104-.../...-.BS1/1-N

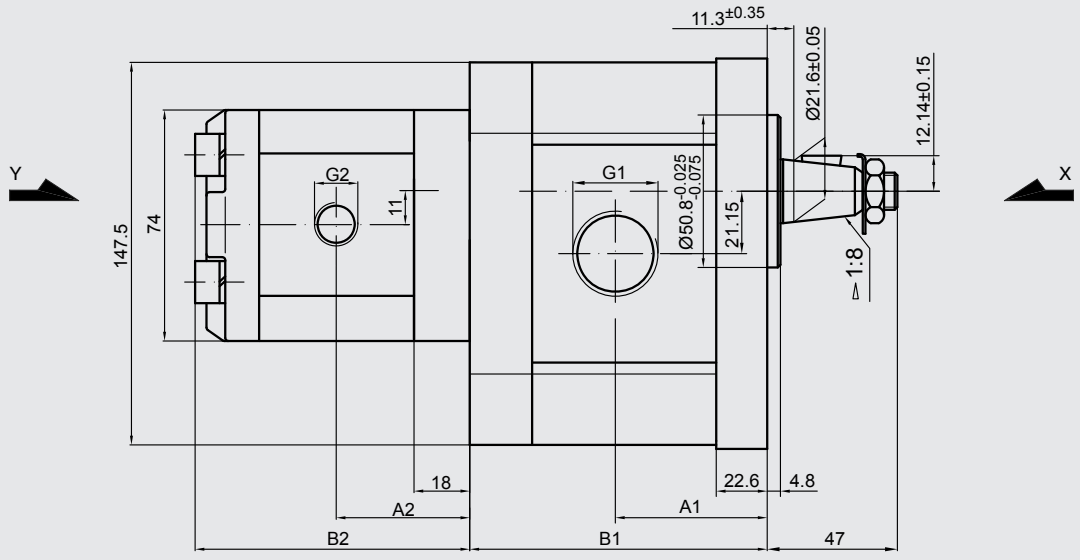

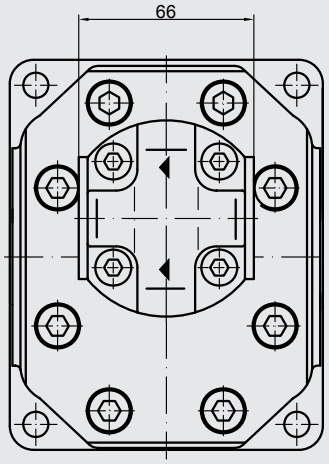

View Y

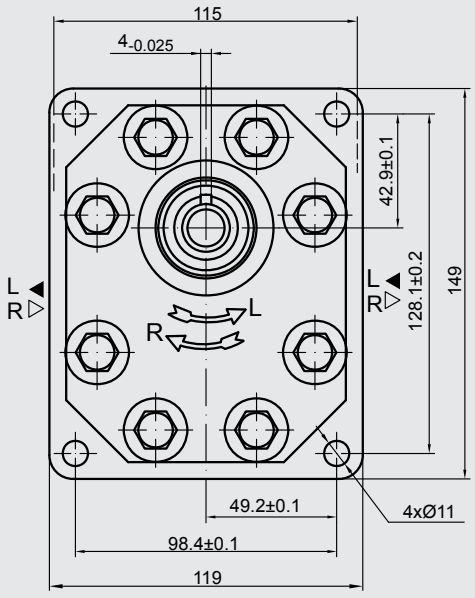

View X

Front pump size 3:

Displacement	Geometric displacement	Flow		Pressure Rated	Max. speed	Dimensions			
		at 1500 rpm	at max. rpm		n	A1	B1	Inlet	Outlet
	[cm³/rev]	[l/min]	[l/min]	[bar]	[rpm]	[mm]	[mm]	G1	G1
2000	20	28.2	56.4	250	3000	56.1	117.2	G 3/4	G 3/4
2250	22.5	31.7	63.5			57.6	120.2		
2500	25	35.3	70.5			58.3	121.6		
2800	28	39.5	79.0			60.2	125.2		
3200	32	45.1	90.2			66.5	137.8	G 1	
3600	36	51.3	95.8	240	2800	68.0	141.0		
4200	42	59.9	99.8	230	2500	70.8	146.5		
4600	46	65.6	100.5	210	2300	72.7	150.3		
5000	50	71.3	99.8	185	2100	74.5	153.9		
5500	55	78.4	91.4	165	1750	76.7	158.4		
6000	60	85.5	99.8	150		78.7	162.9		

End pump size 1:

Displacement	Geometric displacement	Flow		Pressure Rated	Max. speed	Dimensions			
		at 1500 rpm	at max. rpm		n	A2	B2	Inlet	Outlet
	[cm³/rev]	[l/min]	[l/min]	[bar]	[rpm]	[mm]	[mm]	G2	G2
100	1	1.40	3.26	250	3500	39.1	81	G 3/8	G 3/8
125	1.25	1.74	4.07			39.5	82		
160	1.6	2.23	5.21			40.3	83.6		
200	2	2.82	6.58			41.1	85.2		
250	2.5	3.53	8.23			42.1	87.2		
315	3.15	4.44	10.36			43.5	89.8	G 1/2	
365	3.65	5.15	12.01			44.4	91.9		
420	4.2	5.92	13.82			45.5	94.1		
500	5	7.05	14.10		3000	47.1	97.2		
610	6.1	8.69	14.49	200	2500	49.4	101.8		
740	7.4	10.55	17.58	170		52.1	107.2		

6.5.32 Triple pump size 3 / size 1 / size 1

PGE104-.../.../...-.BS4/4/4-N

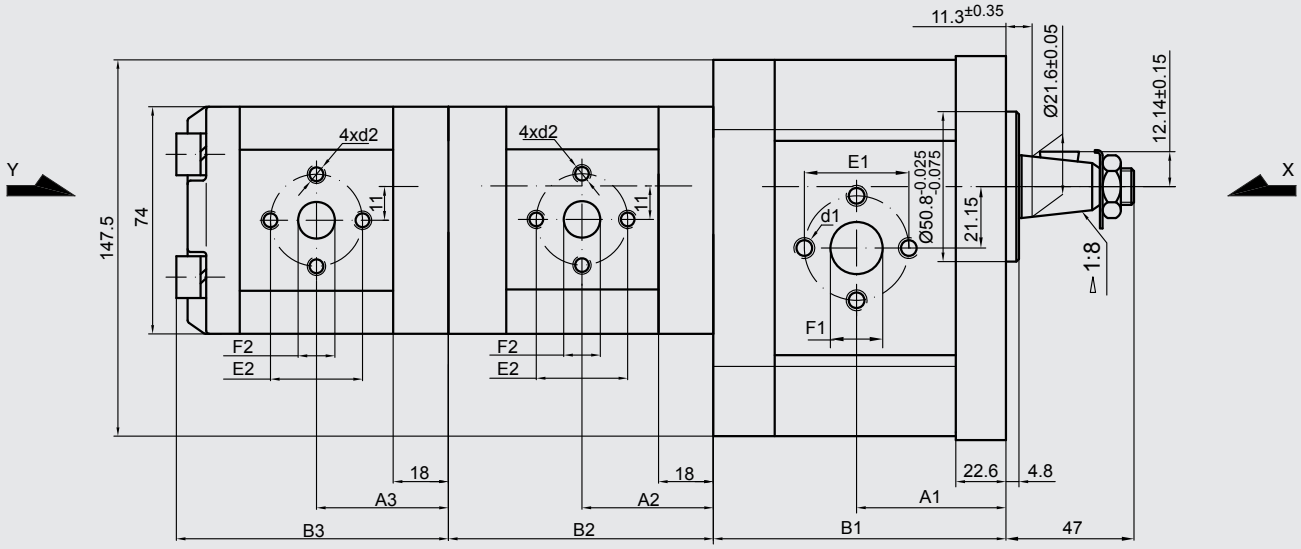

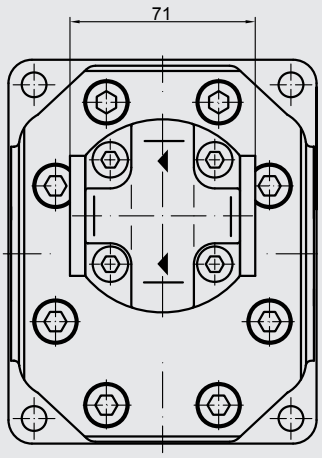

View Y

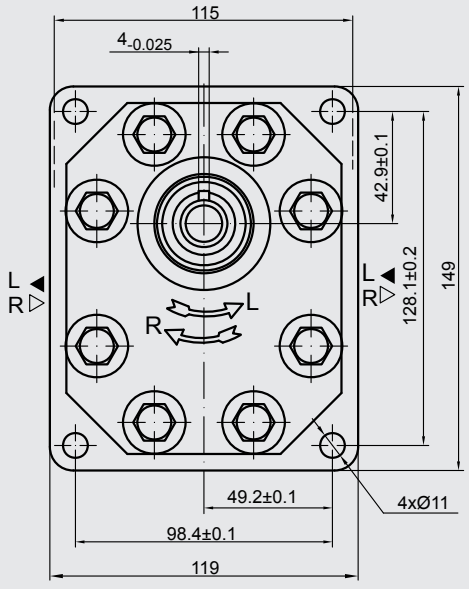

View X

Front pump size 3:

Displacement	Geometric displacement	Flow		Pressure Rated	Max. speed	Dimensions								
								Inlet			Outlet		
	[cm³/rev]	at 1500 rpm [l/min]	at max. rpm [l/min]	[bar]	n [rpm]	A1 [mm]	B1 [mm]	E1	F1	d1	E1	F1	d1
2000	20	28.2	56.4	250	3000	56.1	117.2	40	19	M8	40	19	M8
2250	22.5	31.7	63.5			57.6	120.2						
2500	25	35.3	70.5			58.3	121.6						
2800	28	39.5	79.0			60.2	125.2						
3200	32	45.1	90.2			66.5	137.8	51	27	M10			
3600	36	51.3	95.8	240	2800	68.0	141.0						
4200	42	59.9	99.8	230	2500	70.8	146.5						
4600	46	65.6	100.5	210	2300	72.7	150.3						
5000	50	71.3	99.8	185	2100	74.5	153.9						
5500	55	78.4	91.4	165	1750	76.7	158.4						
6000	60	85.5	99.8	150		78.7	162.9						

Middle and end pump size 1:

Displacement	Geometric displacement	Flow		Pressure Rated	Max. speed
		at 1500 rpm	at max. rpm		n
	[cm³/rev]	[l/min]	[l/min]	[bar]	[rpm]
100	1	1.40	3.26	250	3500
125	1.25	1.74	4.07		
160	1.6	2.23	5.21		
200	2	2.82	6.58		
250	2.5	3.53	8.23		
315	3.15	4.44	10.36		
365	3.65	5.15	12.01		
420	4.2	5.92	13.82		
500	5	7.05	14.10		3000
610	6.1	8.69	14.49	200	2500
740	7.4	10.55	17.58	170	

Displacement	Dimensions									
	A2	B2	A3	B3	Inlet			Outlet		
	[mm]	[mm]	[mm]	[mm]	E2	F2	d2	E2	F2	d2
100	39.1	79	39.1	79	30	12	M6	30	12	M6
125	39.5	80	39.5	80						
160	40.3	81.6	40.3	81.6						
200	41.1	83.2	41.1	83.2						
250	42.1	85.2	42.1	85.2						
315	43.5	87.8	43.5	87.8						
365	44.4	89.9	44.4	89.9						
420	45.5	92.1	45.5	92.1						
500	47.1	95.2	47.1	95.2						
610	49.4	99.8	49.4	99.8						
740	52.1	105.2	52.1	105.2						

PGE104-.../.../...-.BS1/1/1-N

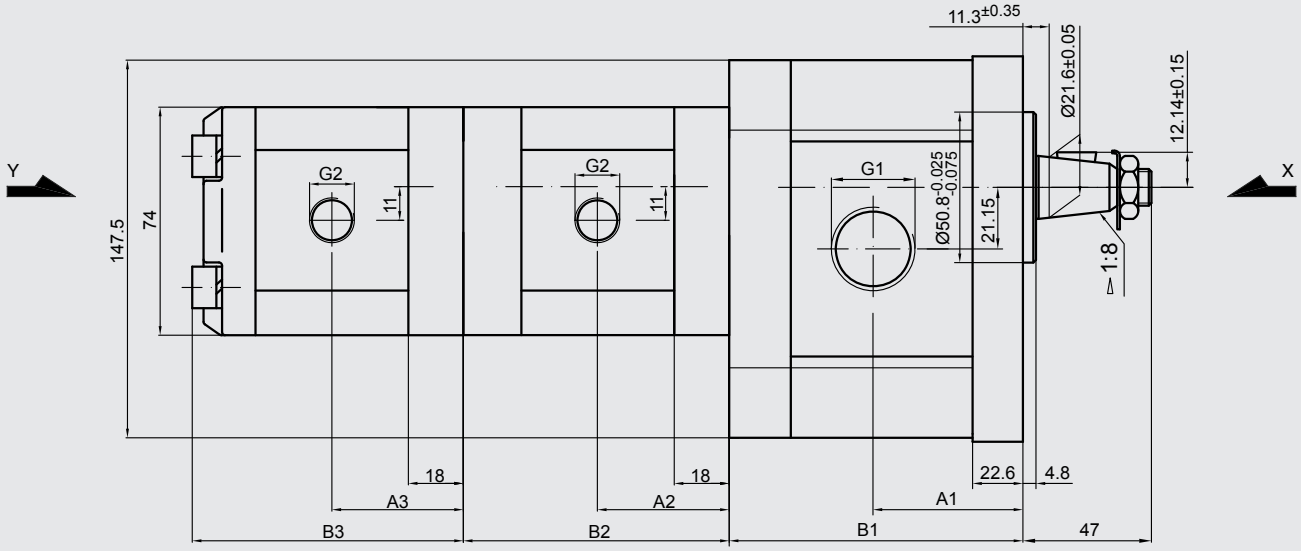

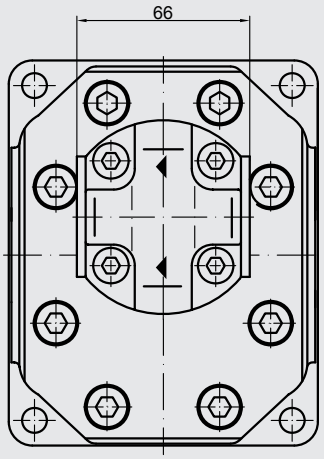

View Y

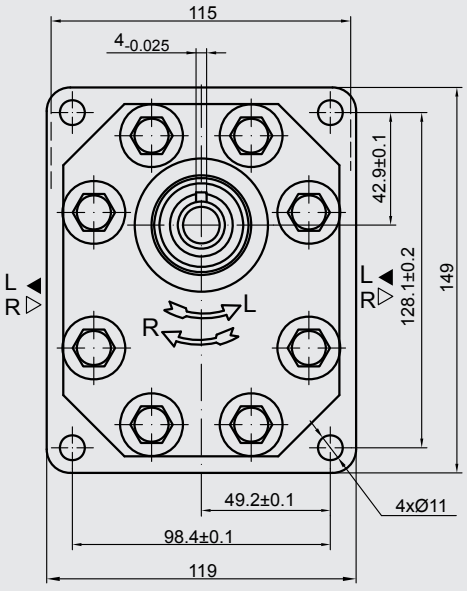

View X

Front pump size 3:

Displacement	Geometric displacement	Flow		Pressure Rated	Max. speed	Dimensions			
		at 1500 rpm	at max. rpm		n	A1	B1	Inlet	Outlet
	[cm³/rev]	[l/min]	[l/min]	[bar]	[rpm]	[mm]	[mm]	G1	G1
2000	20	28.2	56.4	250	3000	56.1	117.2	G 3/4	G 3/4
2250	22.5	31.7	63.5			57.6	120.2		
2500	25	35.3	70.5			58.3	121.6		
2800	28	39.5	79.0			60.2	125.2		
3200	32	45.1	90.2			66.5	137.8	G 1	
3600	36	51.3	95.8	240	2800	68.0	141.0		
4200	42	59.9	99.8	230	2500	70.8	146.5		
4600	46	65.6	100.5	210	2300	72.7	150.3		
5000	50	71.3	99.8	185	2100	74.5	153.9		
5500	55	78.4	91.4	165	1750	76.7	158.4		
6000	60	85.5	99.8	150		78.7	162.9		

Middle and end pump size 1:

Displacement	Geometric displacement	Flow		Pressure Rated	Max. speed
		at 1500 rpm	at max. rpm		n
	[cm³/rev]	[l/min]	[l/min]	[bar]	[rpm]
100	1	1.40	3.26	250	3500
125	1.25	1.74	4.07		
160	1.6	2.23	5.21		
200	2	2.82	6.58		
250	2.5	3.53	8.23		
315	3.15	4.44	10.36		
365	3.65	5.15	12.01		
420	4.2	5.92	13.82		
500	5	7.05	14.10		3000
610	6.1	8.69	14.49	200	2500
740	7.4	10.55	17.58	170	

Displacement	Dimensions					
	A2	B2	A3	B3	Inlet	Outlet
	[mm]	[mm]	[mm]	[mm]	G2	G2
100	39.1	79	39.1	79	G 3/8	G 3/8
125	39.5	80	39.5	80		
160	40.3	81.6	40.3	81.6		
200	41.1	83.2	41.1	83.2		
250	42.1	85.2	42.1	85.2		
315	43.5	87.8	43.5	87.8	G 1/2	
365	44.4	89.9	44.4	89.9		
420	45.5	92.1	45.5	92.1		
500	47.1	95.2	47.1	95.2		
610	49.4	99.8	49.4	99.8		
740	52.1	105.2	52.1	105.2		

6.5.33 Triple pump size 3 / size 2 / size 1

PGE104-.../.../...-.BS4/4/4-N

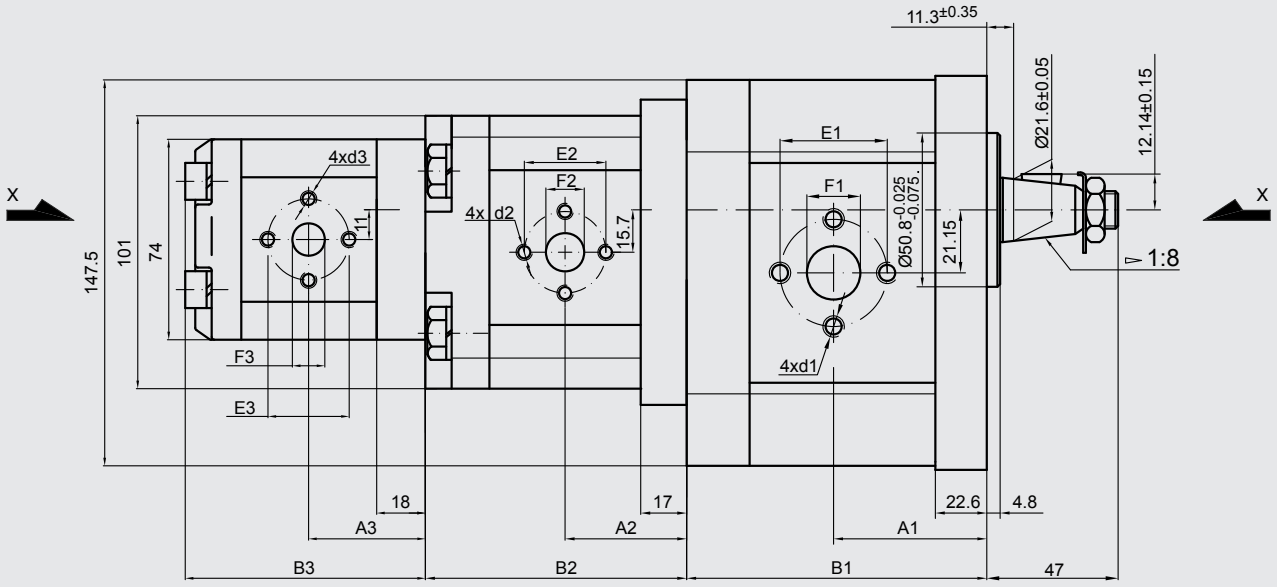

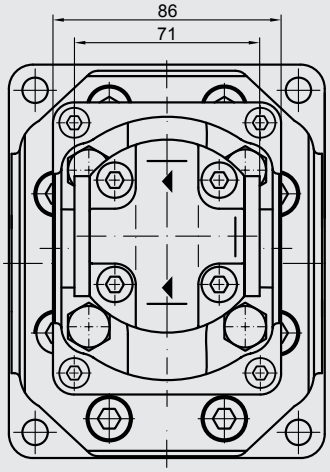

View Y

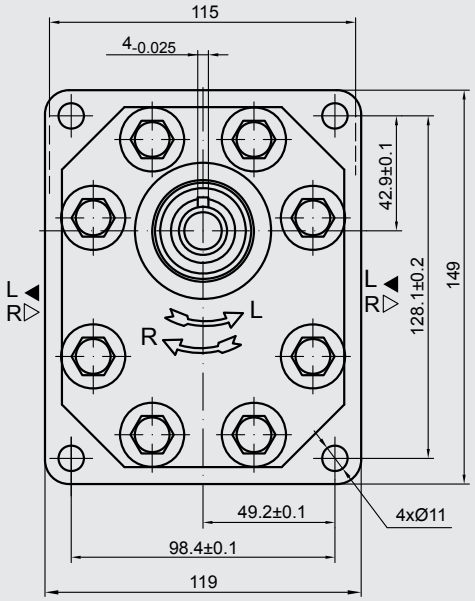

View X

Front pump size 3:

Displacement	Geometric displacement	Flow		Pressure Rated	Max. speed	Dimensions								
								Inlet			Outlet		
	[cm³/rev]	at 1500 rpm [l/min]	at max. rpm [l/min]	[bar]	n [rpm]	A1 [mm]	B1 [mm]	E1	F1	d1	E1	F1	d1
2000	20	28.2	56.4	250	3000	56.1	114.7	40	19	M8	40	19	M8
2250	22.5	31.7	63.5			57.6	117.7						
2500	25	35.3	70.5			58.3	119.1						
2800	28	39.5	79.0			60.2	122.7						
3200	32	45.1	90.2			66.5	135.3	51	27	M10			
3600	36	51.3	95.8	240	2800	68.0	138.5						
4200	42	59.9	99.8	230	2500	70.8	144.0						
4600	46	65.6	100.5	210	2300	72.7	147.8						
5000	50	71.3	99.8	185	2100	74.5	151.4						
5500	55	78.4	91.4	165	1750	76.7	155.9						
6000	60	85.5	99.8	150		78.7	160.4						

Middle pump size 2:

Displacement	Geometric displacement	Flow		Pressure Rated	Max. speed	Dimensions							
								Inlet			Outlet		
	[cm³/rev]	at 1500 rpm [l/min]	at max. rpm [l/min]	[bar]	n [rpm]	A2 [mm]	B2 [mm]	E2	F2	d2	E2	F2	d2
450	4.5	6.14	14.33	250	3500	40.5	87.6	30	13.1	M6	30	13.1	M6
630	6.3	8.69	20.29			42	90.6						
820	8.2	11.32	26.40			43.5	93.5						
1000	10	13.95	32.55			45	96.6	40	19	M8		14.2	
1130	11.3	15.76	36.78			46	98.7						
1200	12	16.92	39.48			46.6	99.9						
1400	14	19.95	46.55			48	103						
1500	15	21.60	36.00		2500	49	104.5						
1600	16	23.04	38.40			50	106.2						
1900	19	27.36	45.60	200		52	111.1						
2200	22	31.68	42.24	180	2000	55	116.1						
2500	25	36.00	48.00	160		57.2	121.1				40	19	M8

End pump size 1:

Displacement	Geometric displacement	Flow		Pressure Rated	Max. speed	Dimensions							
								Inlet			Outlet		
	[cm³/rev]	at 1500 rpm [l/min]	at max. rpm [l/min]	[bar]	n [rpm]	A3 [mm]	B3 [mm]	E3	F3	d3	E3	F3	d3
100	1	1.40	3.26	250	3500	39.1	81	30	12	M6	30	12	M6
125	1.25	1.74	4.07			39.5	82						
160	1.6	2.23	5.21			40.3	83.6						
200	2	2.82	6.58			41.1	85.2						
250	2.5	3.53	8.23			42.1	87.2						
315	3.15	4.44	10.36			43.5	89.8						
365	3.65	5.15	12.01			44.4	91.9						
420	4.2	5.92	13.82			45.5	94.1						
500	5	7.05	14.10		3000	47.1	97.2						
610	6.1	8.69	14.49	200	2500	49.4	101.8						
740	7.4	10.55	17.58	170		52.1	107.2						

PGE104-.../.../...-.BS1/1/1-N

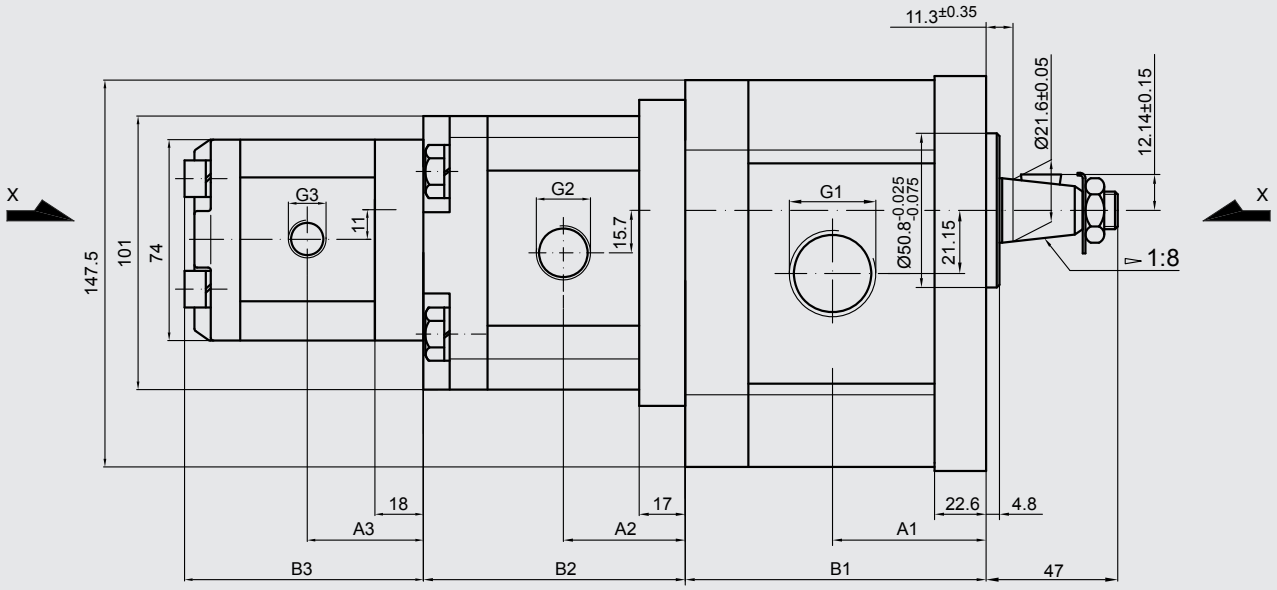

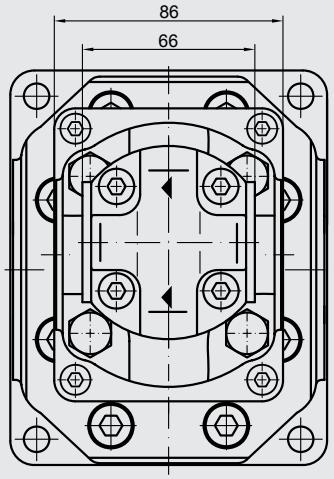

View Y

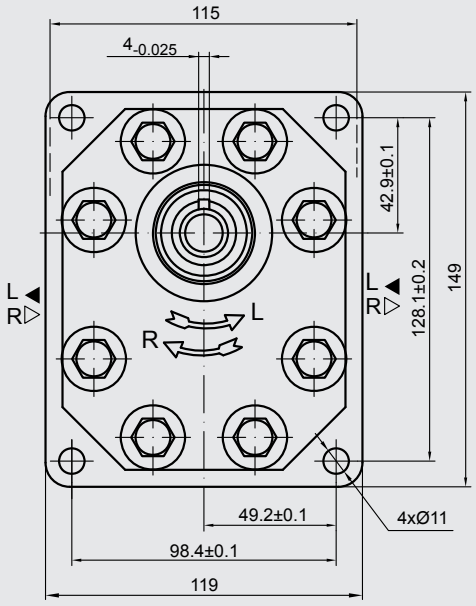

View X

Front pump size 3:

Displacement	Geometric displacement	Flow		Pressure Rated	Max. speed	Dimensions			
		at 1500 rpm	at max. rpm		n	A1	B1	Inlet	Outlet
	[cm³/rev]	[l/min]	[l/min]	[bar]	[rpm]	[mm]	[mm]	G1	G1
2000	20	28.2	56.4	250	3000	56.1	114.7	G 3/4	G 3/4
2250	22.5	31.7	63.5			57.6	117.7		
2500	25	35.3	70.5			58.3	119.1		
2800	28	39.5	79.0			60.2	122.7		
3200	32	45.1	90.2			66.5	135.3	G 1	
3600	36	51.3	95.8	240	2800	68.0	138.5		
4200	42	59.9	99.8	230	2500	70.8	144.0		
4600	46	65.6	100.5	210	2300	72.7	147.8		
5000	50	71.3	99.8	185	2100	74.5	151.4		
5500	55	78.4	91.4	165	1750	76.7	155.9		
6000	60	85.5	99.8	150		78.7	160.4		

Middle pump size 2:

Displacement	Geometric displacement	Flow		Pressure Rated	Max. speed	Dimensions			
		at 1500 rpm	at max. rpm		n	A2	B2	Inlet	Outlet
	[cm³/rev]	[l/min]	[l/min]	[bar]	[rpm]	[mm]	[mm]	G2	G2
450	4.5	6.14	14.33	250	3500	40.5	87.6	G 1/2	G 1/2
630	6.3	8.69	20.29			42	90.6		
820	8.2	11.32	26.40			43.5	93.5		
1000	10	13.95	32.55			45	96.6	G 3/4	
1130	11.3	15.76	36.78			46	98.7		
1200	12	16.92	39.48			46.6	99.9		
1400	14	19.95	46.55			48	103		
1500	15	21.60	36.00		2500	49	104.5		
1600	16	23.04	38.40			50	106.2		
1900	19	27.36	45.60	200		52	111.1		
2200	22	31.68	42.24	180	2000	55	116.1		
2500	25	36.00	48.00	160		57.2	121.1		

End pump size 1:

Displacement	Geometric displacement	Flow		Pressure Rated	Max. speed	Dimensions			
		at 1500 rpm	at max. rpm		n	A3	B3	Inlet	Outlet
	[cm³/rev]	[l/min]	[l/min]	[bar]	[rpm]	[mm]	[mm]	G3	G3
100	1	1.40	3.26	250	3500	39.1	81	G 3/8	G 3/8
125	1.25	1.74	4.07			39.5	82		
160	1.6	2.23	5.21			40.3	83.6		
200	2	2.82	6.58			41.1	85.2		
250	2.5	3.53	8.23			42.1	87.2		
315	3.15	4.44	10.36			43.5	89.8	G1/2	
365	3.65	5.15	12.01			44.4	91.9		
420	4.2	5.92	13.82			45.5	94.1		
500	5	7.05	14.10		3000	47.1	97.2		
610	6.1	8.69	14.49	200	2500	49.4	101.8		
740	7.4	10.55	17.58	170		52.1	107.2		