Bell housings with rigid/flexible pump mounting
PTS / PT

1. DESCRIPTION

1.1. DESCRIPTION

Bell housings are connection elements between drive motors and hydraulic pumps. Both connecting flanges are supplied ready for installation. The bell housings are made from an aluminium cast alloy.

1.2. MODELS

Bell housings in both flexible and rigid design are available in dimensions to the VDMA 24561 standard.

2. TECHNICAL SPECIFICATIONS

2.1. GENERAL

2.1.1 **Mounting position**
No orientation restrictions.

2.1.2 **Operating temperature**
-20 °C to +100 °C

2.1.3 **Noise level reduction**
The noise level reduction achieved depends on many factors such as pump type, operating pressure, type of fitting, design etc. It is therefore not possible to quote exact figures. In general, noise level reductions of up to 6 db(A) can be achieved.

The illustration in the next column shows how the test is set up, together with a graph showing typical noise level improvements when using a flexible bell housing compared to a rigid bell housing.

Test set-up

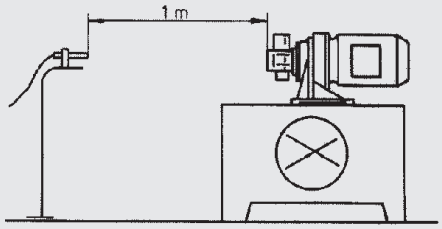

Bell housing with foot bracket mounted on the oil tank cover plate.

Noise level diagram

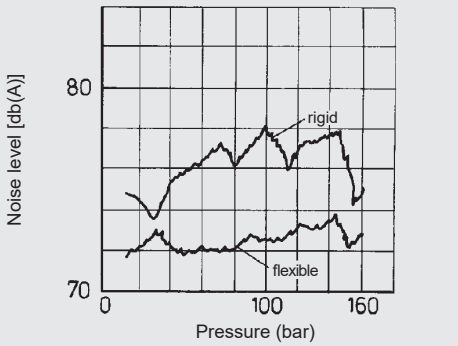

2.1.4 Notes on mounting

The bolts used for mounting the motor to the pump must be long enough in order to fully utilize the available thread depth on the bell housing. Bolts that are too short may damage the thread and thereby the entire unit.

2.1.5 Weight loading

The permitted radial or axial load of the bell housing with flexible and rigid pump mounting, allowing for an operating temperature of +60 °C:

Bell housing nom. size	Model damping ring	Permitted force due to gravity $F_{max.}$ [N]	Centre of gravity distance for radial loads L [mm]
160	Only rigid bell housing possible		
200	E	400	200
	K	500	
250	E	600	200
	K	800	
300	E	1000	200
	K	1300	
350	E	1500	200
	K	2000	
400	E	2200	200
	K	3000	
450	E	4000	200
	K	5500	
550	E	4000	200
	K	5500	
660	E	4500	200
	K	6000	
800	Only rigid bell housing possible		

For a larger centre of gravity distance **L*** the permitted force due to gravity is reduced according to the following formula:

$$F_{permitt.*} = \frac{F_{max.} \cdot L}{L^*} \text{ [N]}$$

If the centre of gravity distance **L*** of the pump is smaller than the centre of gravity distance **L** in the table, then the permitted force due to gravity $\mathbf{F_{permitt.}}$ for the pump is equal to the maximum force due to gravity $\mathbf{F_{max}}$ in the table.

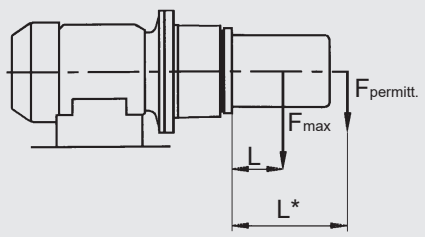

2.2. SPECIFICATIONS

2.2.1 Permitted fluids

Mineral oil as per DIN 51524,
other fluids on request.

NOTE

The information in this brochure relates to the operating conditions and applications described. For applications and operating conditions not described, please contact the relevant technical department.

The operator is always responsible for determining the product suitability for the specific application. Quantified values for product characteristics are average values for a new product that undergo a time deterioration process.

Subject to technical modifications and errors.

3. MODEL CODE

PT – 250 / M / 120 / FB092 – E / MB / F3

(Also order example)

Designation
PTS = rigid bell housing
PT = flexible bell housing

Nominal size for IEC standard motor (model B5, B35, V1, V15)

Nom. size	Model rigid flexible PTS	PT	Electric motor size	Power at n = 1500 rpm
160	x		71	0.25 - 0.37 kW
200	x	x	90	1.1 - 1.5 kW
250	x	x	100/112	2.2 - 4 kW
300	x	x	132	5.5 - 7.5 kW
350	x	x	160	11 - 15 kW
400	x	x	200	30 kW
450	x	x	225	37 - 45 kW
550	x	x	250	55 kW
660	x	x	315	110 - 200 kW
800	x		335/400	250 - 400 kW

Mineral oil resistance
M = mineral oil to DIN 51524
(others on request)

Bell housing length N

Bore template code for pump connection
(see our sizing program PT-Web light)

Type of damping ring (only for flexible bell housings)*
E = standard (60 Shore A)
K = damping ring for higher loads (75 Shore A)

Model with additional boreholes
MB = mounting hole
LB = leakage oil hole
GI = grille for MB

Accessories
... = no accessories (no details)
F3 = with bell housing foot bracket (light range)
F4 = with bell housing foot bracket (heavy range)

* See point 2.1.5 Weight loading

3.1. DIMENSIONS

3.1.1 Dimensions of rigid bell housing PTS

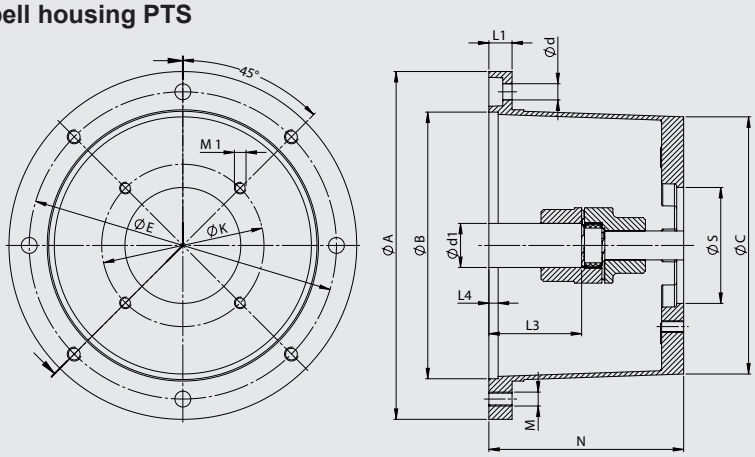

Size of electric motor	KW at n = 1500 rpm	Shaft end Ø d_1 x L_3	Bell housing	Ø A	Ø B	Ø C	E	M	Ø d	L1	L4
71	0.25 - 0.37	14x30	PTS-160	160	110	110	130	M8	9	13	4
80	0.55 - 0.75	19x40	PTS-200	200	130	145	165	M10	11	16	6
90S-90L	1.1 - 1.5	24x50									
100L-112M	2.2 - 4	28x60	PTS-250	250	180	190	215	M12	14	19	6
132S-132M	5.5 - 7.5	38x80	PTS-300	300	230	234	265	M12	14	20	6
160M-160L	11 - 15	42x110	PTS-350	350	250	260	300	M16	18	25	6
180M-180L	18.5 - 22	48x110									
200 L	30	55x110	PTS-400	400	300	300	350	M16	18	25	6
225S-225M	37 - 45	60x140	PTS-450	450	350	350	400	M16	18	25	6
250M	55	65x140	PTS-550	550	450	450	500	M16	18	26	6
280S-280M	75 - 90	75x140									
315S-315L	110 - 200	80x170	PTS-660	660	550	550	600	M20	22	32	6
355L-400L	250 - 400	95x170	PTS-800	800	680	680	740	M20	23	60	10

3.1.2 Dimensions of flexible bell housing PT

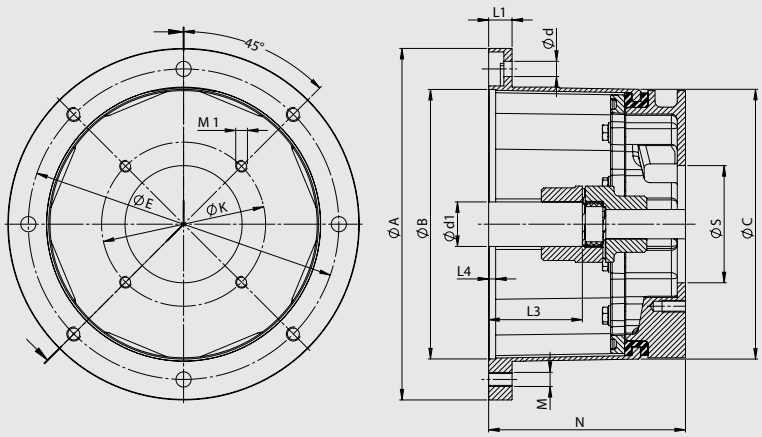

Size of electric motor	KW at n = 1500 rpm	Shaft end Ø d_1 x L_3	Bell housing	Ø A	Ø B	Ø C	E	M	Ø d	L1	L4
80	0.55 - 0.75	19x40	PT-200	200	130	145	165	M10	11	16	6
90S-90L	1.1 - 1.5	24x50									
100L-112M	2.2 - 4	28x60	PT-250	250	180	190	215	M12	14	20	6
132S-132M	5.5 - 7.5	38x80	PT-300	300	230	234	265	M12	14	20	6
160M-160L	11 - 15	42x110	PT-350	350	250	260	300	M16	18	25	6
180M-180L	18.5 - 22	48x110									
200 L	30	55x110	PT-400	400	300	300	350	M16	18	25	6
225S-225M	37 - 45	60x140	PT-450	450	350	350	400	M16	18	25	6
250M	55	65x140	PT-550	550	450	450	500	M16	18	40	6
280S-280M	75 - 90	75x140									
315S-315L	110 - 200	80x170	PT-660	660	550	550	600	M20	22	32	6

To identify the bore template code, please use our free-of-charge dimensioning program PT Web light when possible or ask at our Head Office.

Accessories:
For the range of accessories (bell housing foot brackets, bell housing mounting plate, damping rails, damping rings and couplings) please use our supplementary brochure "Bell Housing Accessories". This brochure can be downloaded from our website at **www.hydac.com**.

HYDAC Accessories GmbH
Hirschbachstr. 2
66280 Sulzbach/Saar
Tel.: +49 (0)6897 - 509-01
Fax: +49 (0)6897 - 509-1009
Internet: www.hydac.com
E-Mail: accessories@hydac.com