HYDAC INTERNATIONAL

Fluid level gauge
with pipe connection
FSAR

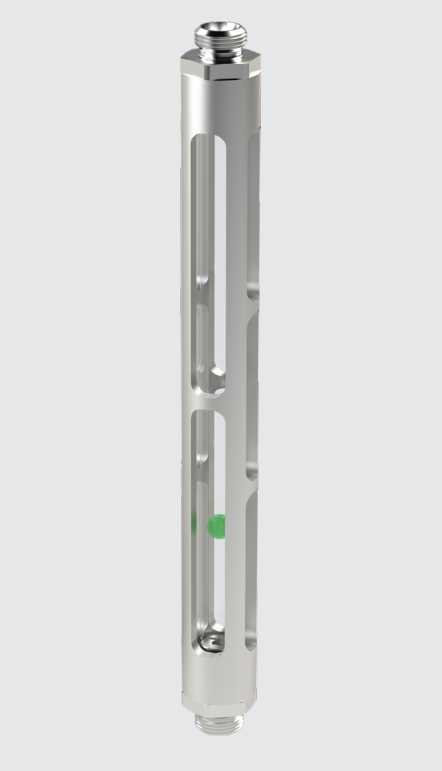

SYMBOL
Size 088 - 342

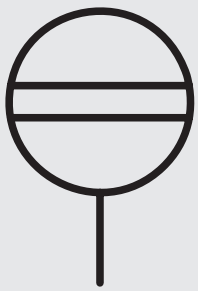

DESCRIPTION
The FSAR is a fluid level gauge in round design with pipe connections on both sides.
The fluid enters the unit via the lower connection bore and is clearly visible in the tube. This means that the fluid level can be easily seen.
External mounting can be at larger distances following the principle of communicating pipes.
To better visualize the level, floats can be used as hollow balls or according to customer requirements.

PRODUCT FEATURES
- Nominal size 088 – 342 mm
- Round riser tube made of high-quality plastic or glass
- Aluminium connectors and frame
- Pipe connection on both sides
- External attachment, even at greater distances

CUSTOMER BENEFITS
- Robust design
- Increased hydraulic fluid temperature, media compatibility and UV-resistance
- The fluid level can be seen from all sides

DESIGN

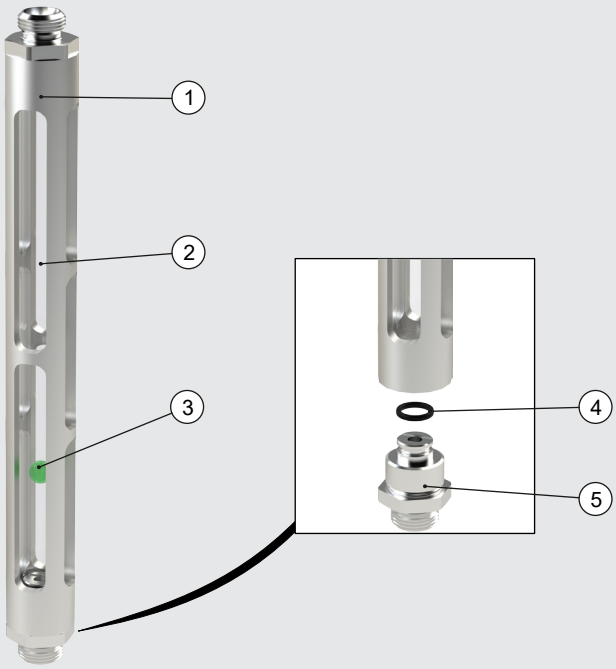

Item	Description
(1)	Housing frame
(2)	Riser tube
(3)	Float
(4)	O-ring (2x)
(5)	Connector (2x)

Model code
(also order example)

FSAR - 0137 - 0 . 10100 / O2 / 12LR . 011 4SF

Designation
FSAR = fluid level gauge with pipe connection

Nominal size (≅ measuring range in mm)
0088, 0137, 0215, 0342

Seal material
0 = NBR
2 = FKM

Tube geometry / materials
Tube geometry
1 = Round tube Ø19
Material - Tube
0 = Plastic
1 = Glass
Material - Connectors
1 = Aluminium
Material - Frame
00 = Aluminium

Options
Contrast pane
O1 = without contrast pane, blue hollow ball Ø8
O2 = without contrast pane, green hollow ball Ø10
Additional thermal function
- = without additional function (standard)

Type of connection
12LR = 12LR both sides
9/16UNF = 9/16UNF both sides

Mounting elements
Material of nuts
0 = Steel (galvanised surface protection, chromium(VI)-free)
Sealing washer
1 = without sealing washer
Mounting nuts
0 = with mounting nuts in combination with longer connector (by request)
1 = without mounting nuts

Quantity of viewing windows
4SF = viewable from 4 sides
1SF = half cut (by request)

NOTICE:
As regards the relevant operating and environmental conditions (temperature, dynamics, cleaning), the suitability of the product must be verified by the vehicle/system manufacturer or owner.

If you have any questions, please get in touch with your contact in Technical Sales.

TECHNICAL DATA

Connection	Tube connection on both sides			
Type of connection	12 LR according to DIN 2353 9/16UNF according to SAE J 514 (others by request)			
Mounting position	parallel to the tank wall			
Weight	Size 0088	Size 0137	Size 0215	Size 0342
	0.188 kg	0.214 kg	0.239 kg	0.295 kg
Design of riser tube	Round tube Ø19			
Media	Mineral oil to DIN 51524 Part 1 and 2, water, oil, emulsions (other fluids on request)			
Viscosity of fluid	Max. 2000 mm²/s			
Max. operating pressure	0.5 bar (higher pressures on request)			
Flow direction	no orientation restrictions			
Ambient temperature	-20 °C … +95 °C -40 °C … +95 °C (on request)			
Temperature of operating fluid	-20 °C … +95 °C -40 °C … +95 °C (on request)			
Material: Connectors:	Aluminium			
Riser tube:	Glass or plastic			
Housing frame:	Aluminium			
Seal:	NBR or FKM			
Optional	Mounting nuts (combined with longer connector)			

NOTICE:
To ensure correct functioning, pressure, viscosity and temperature specifications must be observed.

WINDOW VARIATIONS

Size 088 **Size 137** **Size 215** **Size 342**

Viewable from 4 sides

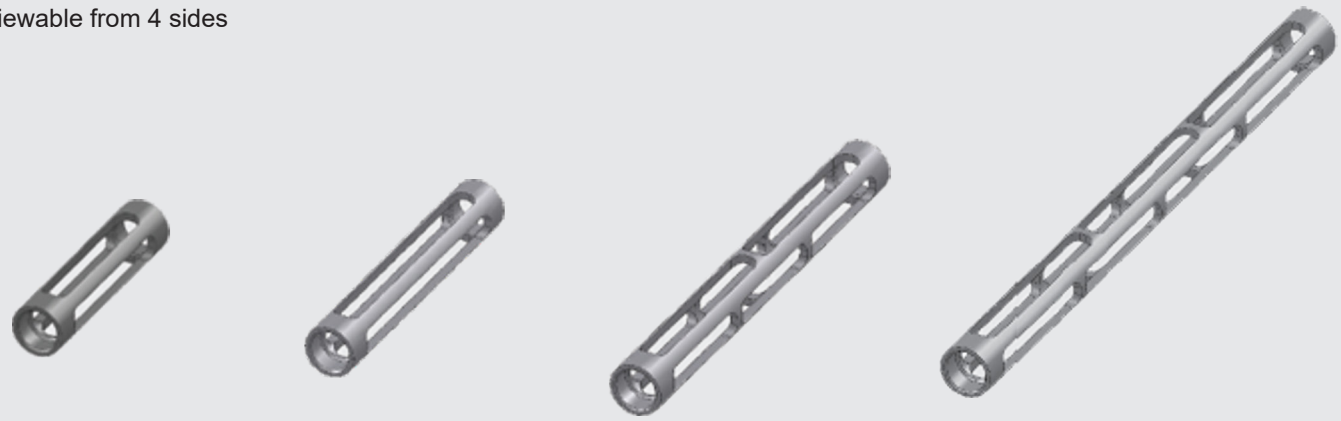

Half cut
(by request)

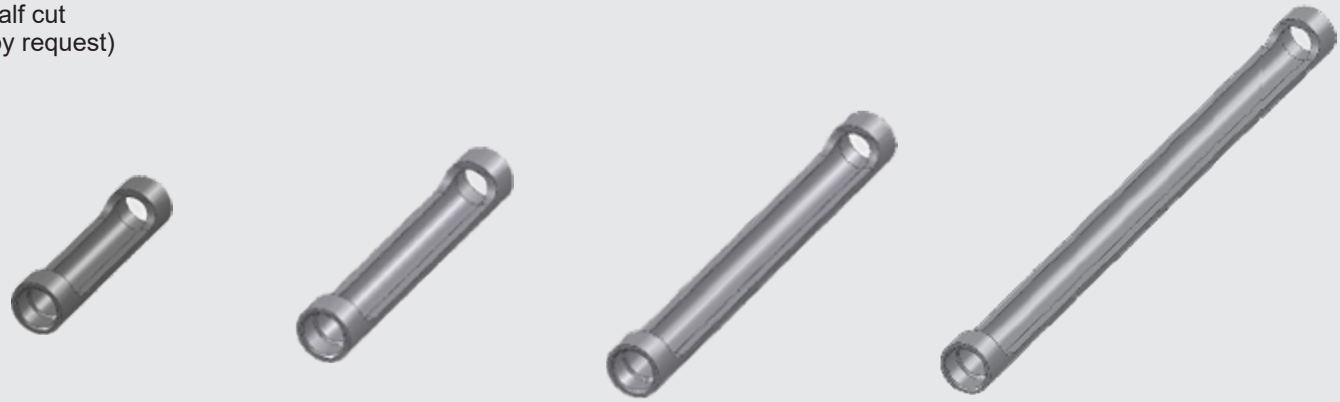

DIMENSIONS

(dimensions in mm)

without mounting nuts

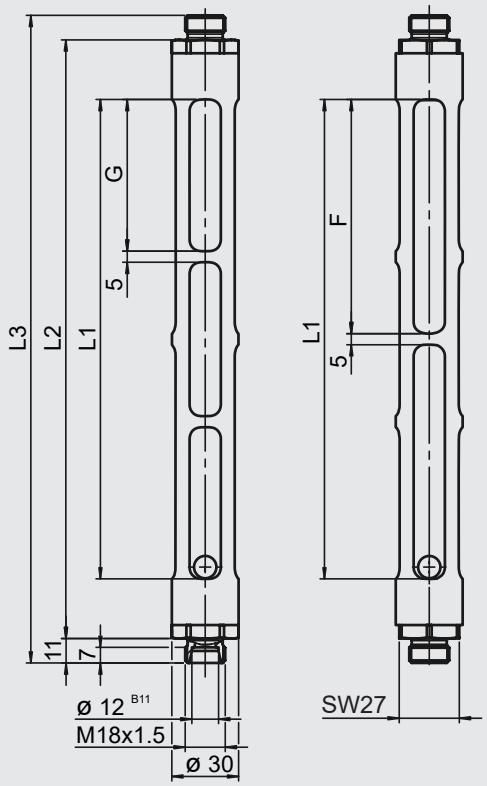

with mounting nuts

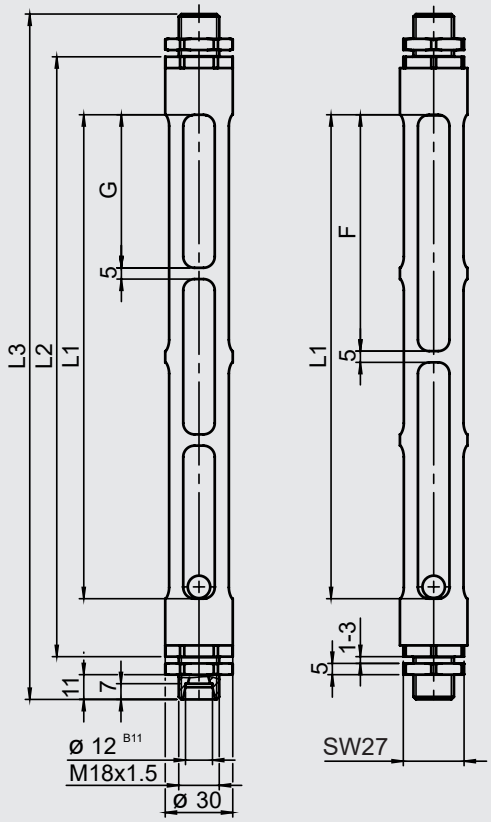

Design	Nominal size ≅	L1		L2		L3		F		G	
	Measuring range	[mm]	[in]	[mm]	[in]	[mm]	[in]	[mm]	[in]	[mm]	[in]
without nut	0088	88	3.5	141.5	5.8	163.5	6.4	88	3.5	88	3.5
	0137	137	5.4	190.5	7.5	212.5	8.4	137	5.4	137	5.4
	0215	215	8.5	268.5	10.6	290.5	11.4	2x 105	2x 4.1	3x 68	2.7
	0342	342	13.5	395.5	15.6	417.5	16.4	3x 110.5	3x 4.3	4x 82	3.2
with nut	0088	88	3.5	139.5	5.5	177.5	7	88	3.5	88	3.5
	0137	137	5.4	188.5	7.4	226.5	8.9	137	5.4	137	5.4
	0215	215	8.5	266.5	10.5	304.5	12	2x 105	2x 4.1	3x 68	2.7
	0342	342	13.5	393.5	15.5	431.5	17	3x 110.5	3x 4.3	4x 82	3.2

SPARE PARTS

Spare part	Quantity	Order no. = part no.
O-ring 10 x 2.5 NBR	2	602300
O-ring 10 x 2.5 FKM	2	628339

NOTICE:

These O-rings are suitable for the temperature range -20 °C … +95 °C.

Low-temperature O-rings (down to -40 °C) are available on request.

NOTE

The information in this brochure relates to the operating conditions and applications described.

For applications and/or operating conditions not described please contact the relevant technical department.

The operator is always responsible for determining the product suitability for the specific application. Quantified values for product characteristics are average values for a new product that undergo a time deterioration process.

Subject to technical modifications and errors.

HYDAC Accessories GmbH
Hirschbachstr. 2
66280 Sulzbach/Saar, Germany
Phone: +49 6897 - 509-01
Internet: www.hydac.com
Email: accessories@hydac.com