HYDAC INTERNATIONAL

Pressure relief valve pilot operated VP-DBP10

DESCRIPTION

HYDAC pilot-operated pressure relief valves limit pressure in meter-in in the system or control the power build-up in meter-out in hydraulic actuators.

FEATURES

- Interface according to ISO 6264-08
- Low flow loss due to maximum size bore holes
- Remote control via port X possible

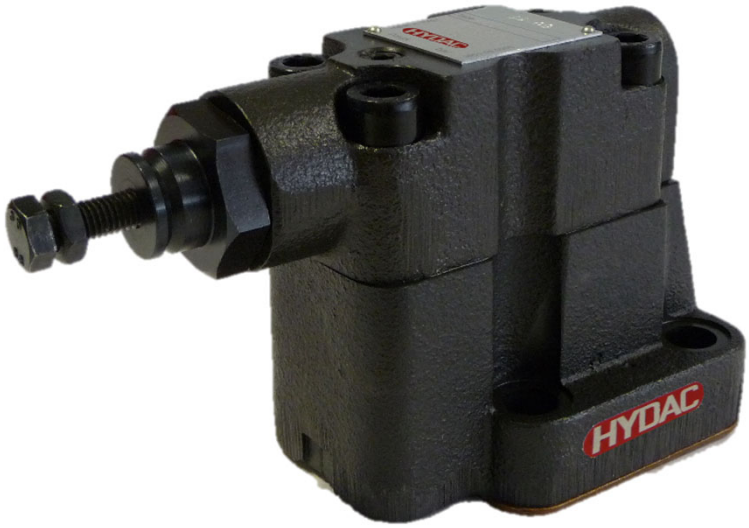

Nominal size 10
up to 400 l/min
up to 350 bar

CONTENT

Description	1
Features	1
Model code	2
Spool types / Symbols	2
Accessories	2
Function	3
Section view	3
Technical Data	3
Performance	3
Dimensions	4

MODEL CODE

VP-DBP 10 070 V S01 / V

Type
Pressure relief valve, pilot operated

Nominal size
10

Pressure ranges
070 = 4 up to 70 bar
210 = 4 up to 210 bar
350 = 4 up tp 350 bar

Type of adjustment
V = adjustable with tool

Series
S01 = standard

Sealing material
V = FKM
N = NBR

SPOOL TYPES / SYMBOLS

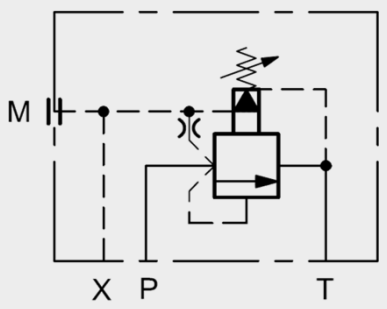

ACCESSORIES

	Designation	Part no.
Seal kits (3-part set)	29,82 x 2,62 -FKM -90 Sh (2 pcs) 9,13 x 2,62 -FKM -90 Sh (1 pcs)	3526098
	29,82 x 2,62 -NBR -90 Sh (2 pcs) 9,13 x 2,62 -NBR -90 Sh (1 pcs)	3526094
Mounting screws (4 pcs)	DIN EN ISO 4762-M16x50–10.9	603171

FUNCTION

The pilot operated pressure relief valve VP-DBP10 has a pilot and a main stage – both are poppet type. Its function is to limit the pressure in the system.
The valve is normally closed.
If the hydaulic force at port P exceeds the pre-set spring tension of the pilot stage, the poppet opens and oil flows from the rear of the main piston to the tank port T. Due to the resulting pressure difference, the main piston moves against the return spring and allows oil from port P to T. This continues until the system pressure is equal to the spring pressure and the valve closes again.

Attention:
Pressures at port T increase the cracking pressure.

SECTION VIEW

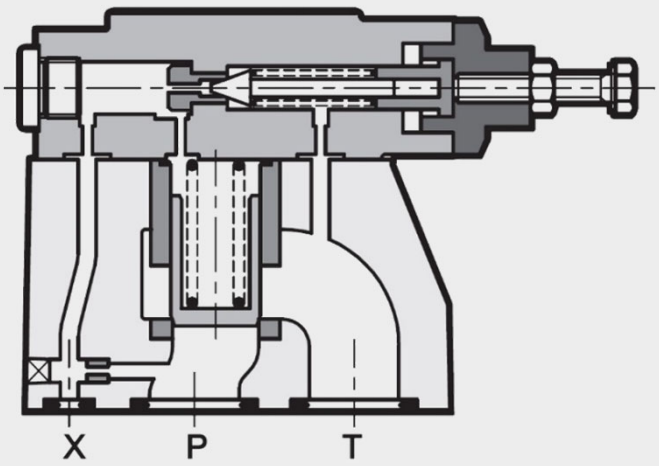

TECHNICAL DATA [1]

General specifications		
MTTFd		150 - 1200 years, according to DIN EN ISO 13849-1:2016; Table C.1, Confirmation from ISO 13849-2:2013; Tables C.1 and C.2
Ambient temperature	[°C]	-20 to +50
Installation position		No orientation restrictions
Weight	[kg]	4,3
Material		Valve casing: Cast iron Name plate: Aluminium
Surface coating		Valve casing: Phosphate plated
Hydraulic specifications		
Operating pressure	[bar]	Port X, P, T: p_{max} = 350
Pressure ranges	[bar]	4 up to 70 4 up to 210 4 up to 350
Nominal flow	[l/min]	400
Operating fluid		Hydraulic oil to DIN 51524 part 1, 2 and 3
Media operating temperature range	[°C]	-20 to +80
Viscosity range	[mm²/s]	10 to 400 (25 is recommended)
Permitted contamination level of operating fluid		Class 20/18/15 to ISO 4406
Sealing material		FKM (standard), NBR

[1] see „Conditions and Instructions for Valves“ in brochure 53.000

PERFORMANCE

Pressure drop
measured at v = 36 mm²/s and T_{oil} = 50°C

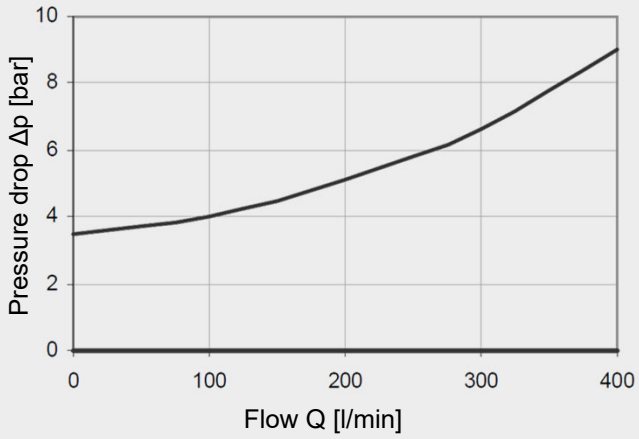

P-Q performance
measured at v = 36 mm²/s and T_{oil} = 50°C

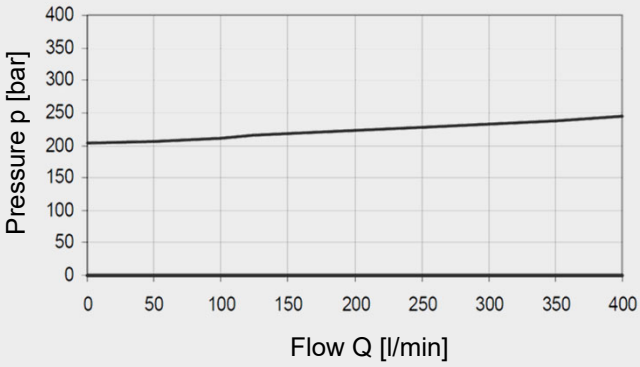

DIMENSIONS

Interface according to ISO 6264-08-13-*-97 (Cetop 4.4.2-2-R08-350)

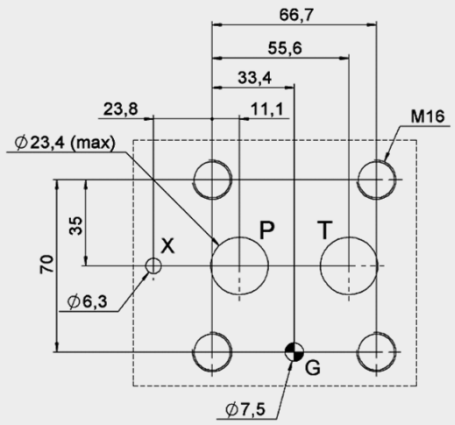

Mounting screws
(not included in delivery)
DIN EN ISO 4762 - M16x50 – 10.9
Tightening torque: 170 Nm

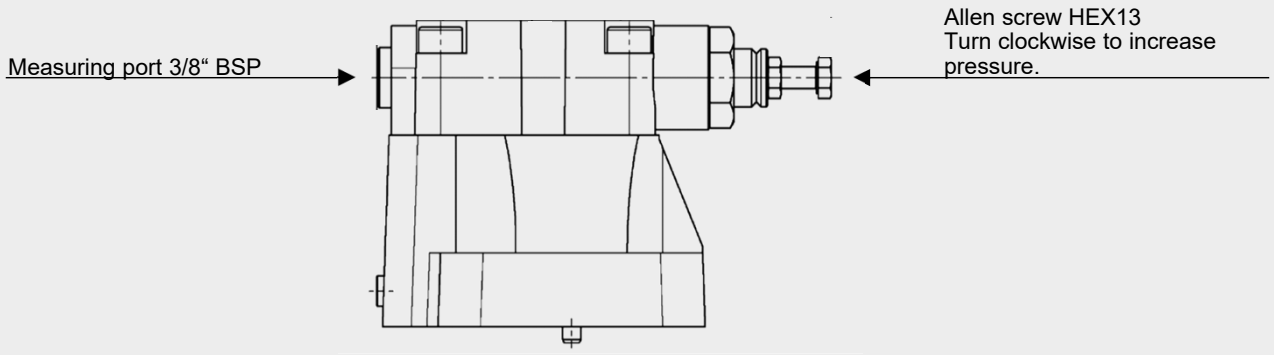

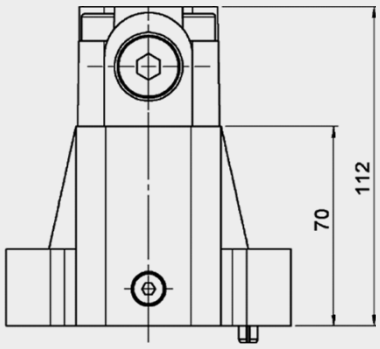

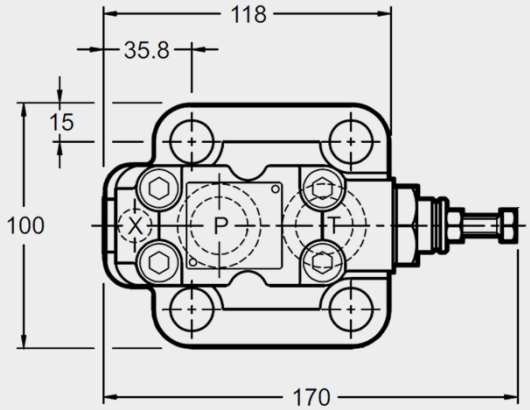

Note
The information in this brochure relates to the operating conditions and applications described. For applications not described, please contact the relevant technical department. All technical details are subject to change without notice.

HYDAC Fluidtechnik GmbH
Justus-von-Liebig-Str.
D-66280 Sulzbach/Saar
Tel: 0 68 97 /509-01
Fax: 0 68 97 /509-598
E-Mail: valves@hydac.com