HYDAC INTERNATIONAL

Inline Filter ACSSF

up to 100 l/min, up to 1379 bar

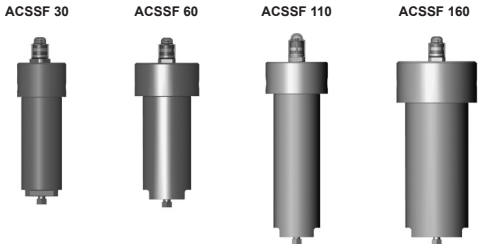

1. TECHNICAL SPECIFICATIONS

1.1 FILTER HOUSING

Construction

The filter housings are designed in accordance with international regulations. They consist of a filter head and a screw-on filter bowl.

Standard equipment:

- without bypass valve
- connection for a clogging indicator(s)
- oil drain plug in filter bowl

1.2 FILTER ELEMENTS

HYDAC filter elements are validated and their quality is constantly monitored according to the following standards:

- ISO 2941
- ISO 2942
- ISO 2943
- ISO 3724
- ISO 3968
- ISO 11170
- ISO 16889

Filter elements are available with the following pressure stability values:

Betamicron® (BH4HC):	210 bar
Betamicron® (BH4HC) /-SS-SO361:	210 bar
Stainless steel wire mesh (D):	210 bar
Chemicron® (M):	210 bar

1.3 FILTER SPECIFICATIONS

Nominal pressure	1035 bar (higher at request)
Test pressure	1707 bar (design pressure: 1138.5 bar)
Temperature range	-20 °C to +80 °C
Material of filter head	ASTM 316 L EN 1.4404 stainless steel
Material of filter bowl	UNS S31803 EN 1.4462 Duplex stainless steel
Type of clogging indicator	VDAC (Differential pressure indicator up to 1035 bar operating pressure)
Pressure setting of clogging indicator	5 bar
Bypass cracking pressure (optional)	6 bar

1.4 SEALS

NBR (Nitrile)

1.5 INSTALLATION

Inline filter

1.6 SPECIAL MODELS AND ACCESSORIES

- Seals in FKM, EPDM, FFKM, FVMQ
- Without bypass valve
- Without port for clogging indicator
- With 2 clogging indicators (visual and electrical)
- With gauge ports (for external piping of pressure sensors)
- Higher pressures on request

1.7 SPARE PARTS

See Original Spare Parts List

1.8 CERTIFICATES AND APPROVALS

Filters comply with the Pressre Equipment Directive (PED) 2014/68/EU. For group 2 fluids.

1.9 COMPATIBILITY WITH HYDRAULIC FLUIDS ISO 2943

- Hydraulic oils H to HLPD DIN 51524
- Lubrication oils DIN 51517, API, ACEA, DIN 51515, ISO 6743
- Compressor oils DIN 51506
- Biodegradable operating fluids VDMA 24568 HETG, HEES, HEPG
- Fire-resistant fluids HFA, HFB, HFC and HFD
- Waterglycols

Symbol for hydraulic systems

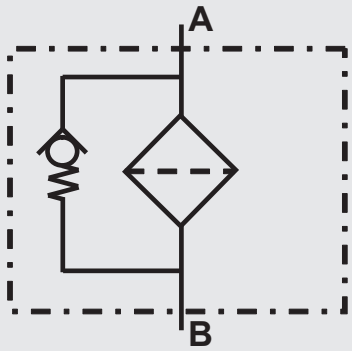

2. MODEL CODE (also order example)

2.1 COMPLETE FILTER

ACSSF1035 BH/HC 60 A0 005 B X / -V

Filter type

ACSSF1035	1035 bar
ACSSF1379	1379 bar

Filter material

BH/HC	Betamicron® (BH4HC)
BH/HC	Betamicron® (BH4HC) only use for water-glycol applications with "SO361"!
M	Chemicron
D	stainless steel wire mesh

Size of filter

Size 30, 60, 110, 160, 330 in 1035 bar
Size 60 and 160 in 1379 bar

Type and size of connection

HYDAC code	Connection type	Tube outside	Thread size
AA	SF250CX20	1/4"	7/16"
A0	SF375CX20	3/8"	9/16"
A1	SF562CX20	9/16"	13/16"
A2	SF750CX20	3/4"	3/4"
A3	SF1000CX20	1"	1-3/8"

Filtration rating in µm

BH/HC:	003, 005, 010, 020
BH/HC (/-SS-SO361):	003, 010
M:	001, 003, 005, 010, 020
D:	025, 040, 060, 100, 150, 200, 250

Type of clogging indicator

W	without port (no clogging indicator)
A	titanium blanking plug in indicator port
B	visual, auto reset (only option for 1379 bar)
BM	visual with manual reset
C	VDHA only
BM+C	visual with manual reset + electrical (= 2 indicators) – not for size 30
E	9/16" UNF Autoclave ports for external connection of pressure sensors – not for size 30

Modification number

X	the latest version is always supplied

Supplementary details

B.	cracking pressure of bypass valve (e.g. B6 = 6 bar); no details = without bypass valve
EX/ENC	electrical clogging indicator EX protection (Eexd IIC T6; with IP66/67 junction box, M20x1.5 cable entry) (VDHA)
IS	clogging indicator with Exia protection and IP 66/67 junction box (M20x1.5 cable entry)
TB6	with triple bypass valve for reversible flow (= 1 check valve, 2 bypass valves - not for size 30)
N	NBR seals
V	FKM seals
FVMQ	Fluorisilicone rubber
EPDM	EPDM seals
K	FFKM seals
W	SO361 Element (stainless steel trim optimised for water glycol)

2.2 REPLACEMENT ELEMENT

0060 D 003 BH4HC /-V-SS-SO361

Size

0030, 0060, 0110, 0160, 0240, 0330

Type

D

Filtration rating in µm

BH4HC:	003, 005, 010, 020
BH4HC (/-SS-SO361):	003, 010

Filter material

BH4HC

Supplementary details

SS-SO361	stainl. steel core and end caps, polyamide support fibre

V, N, FVMQ, EPDM, K (for descriptions, see Point 2.1)

2.3 REPLACEMENT ELEMENT - PROCESS TECHNOLOGY

060 - DH - 100 - D - V

Size
030, 060, 110, 160, 240, 330

Type
DH

Filtration rating in µm
Chemicron® (M): 001, 003, 005, 010, 020
Wire mesh (D): 025, 040, 060, 100, 150, 200, 250

Filter material
M, D

Supplementary details
N, V, NLT, HNBR, EPDM, K (for descriptions, see Point 2.1)

2.4 REPLACEMENT CLOGGING INDICATOR

VDAC 5 B . X /-V

Type
VDAC differential pressure measurement
up to 1035 bar operating pressure

Pressure setting
5 standard 5 bar, others on request

Type of clogging indicator
(see Point 2.1)

Modification number
X the latest version is always supplied

Supplementary details
V, W (for descriptions, see Point 2.1)

3. FILTER CALCULATION / SIZING

The total pressure drop of a filter at a certain flow rate Q is the sum of the housing Δp and the element Δp and is calculated as follows:

$\Delta p_{total} = \Delta p_{housing} + \Delta p_{element}$

$\Delta p_{housing}$ = (see Point 3.1)

$\Delta p_{element} = Q \cdot \frac{SK^*}{1000} \cdot \frac{viscosity}{30}$

(*see Point 3.2)

For ease of calculation, our Filter Sizing Program is available on request free of charge.

NEW: Sizing online at www.hydac.com

3.1 Δp-Q HOUSING CURVES BASED ON ISO 3968

The housing curves apply to mineral oil with a density of 0.86 kg/dm³ and a kinematic viscosity of 30 mm²/s.
In this case, the differential pressure changes proportionally to the density.

Size 30: 1/4" MP

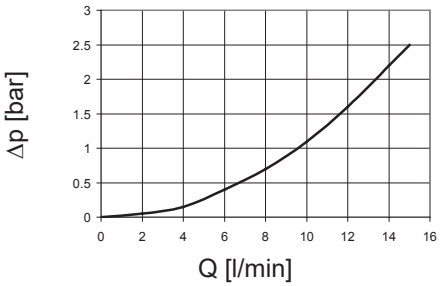

Size 60: 3/8" MP

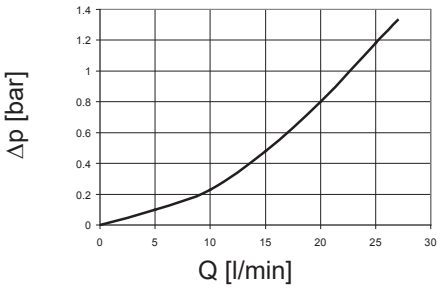

Size 60-110: 9/16" MP

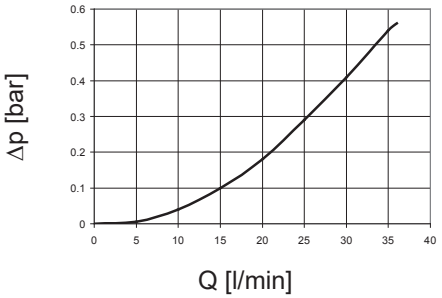

Size 160: 3/4" MP

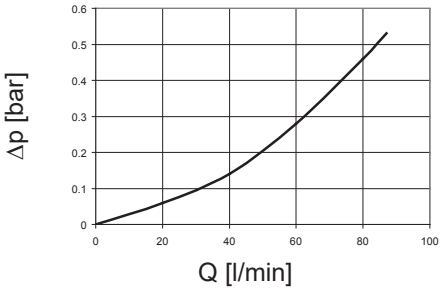

3.2 GRADIENT COEFFICIENTS (SK) FOR FILTER ELEMENTS

The gradient coefficients in mbar/(l/min) apply to mineral oils with a kinematic viscosity of 30 mm²/s. The pressure drop changes proportionally to the change in viscosity.

ACSSF	BH4HC			
	3 µm	5 µm	10 µm	20 µm
30	91.2	50.7	36.3	19.0
60	58.6	32.6	18.1	12.2
110	25.4	14.9	8.9	5.6
160	16.8	10.4	5.9	4.4
240	10.6	6.8	3.9	2.9

4. DIMENSIONS

Inline Filter ACSSF

Size 30

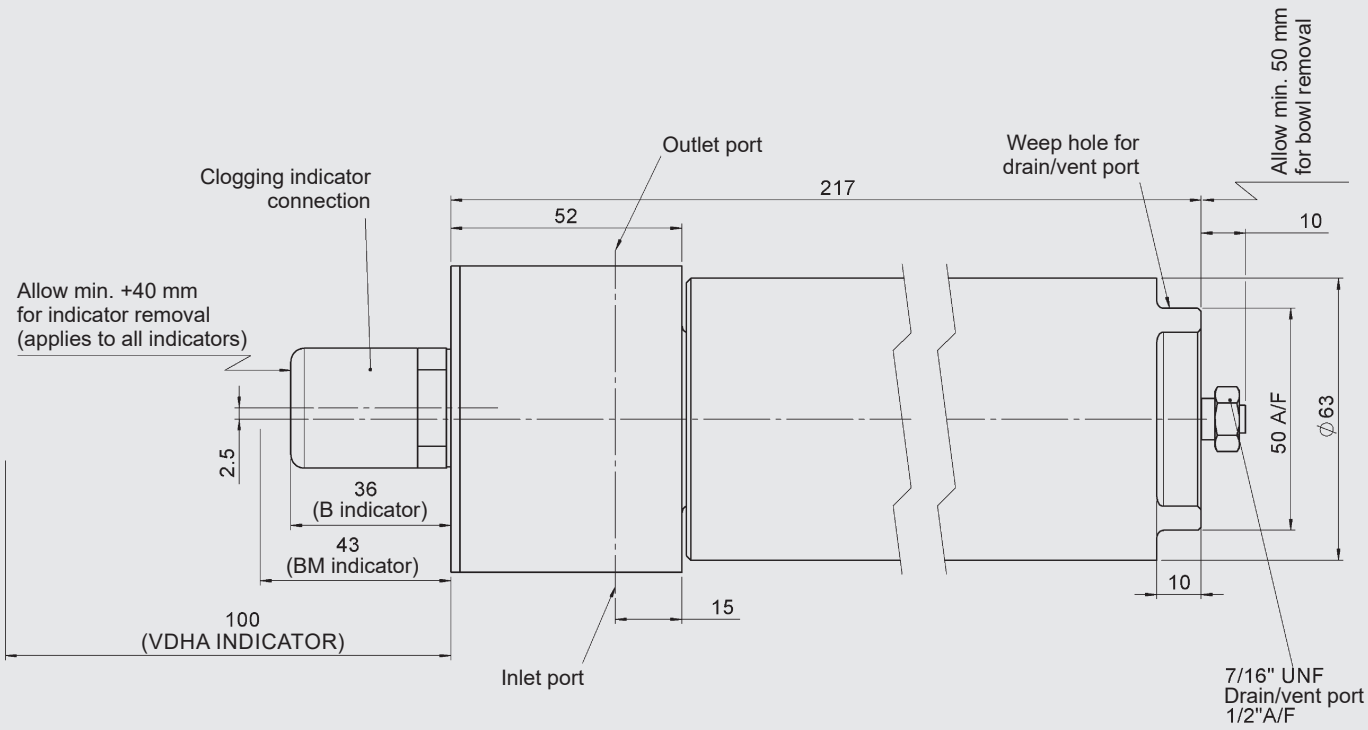

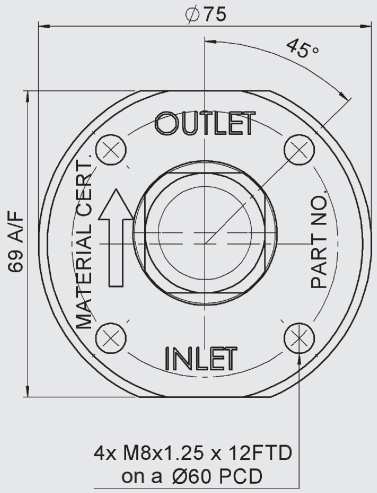

Inline Filter ACSSF

Size 60 - 160

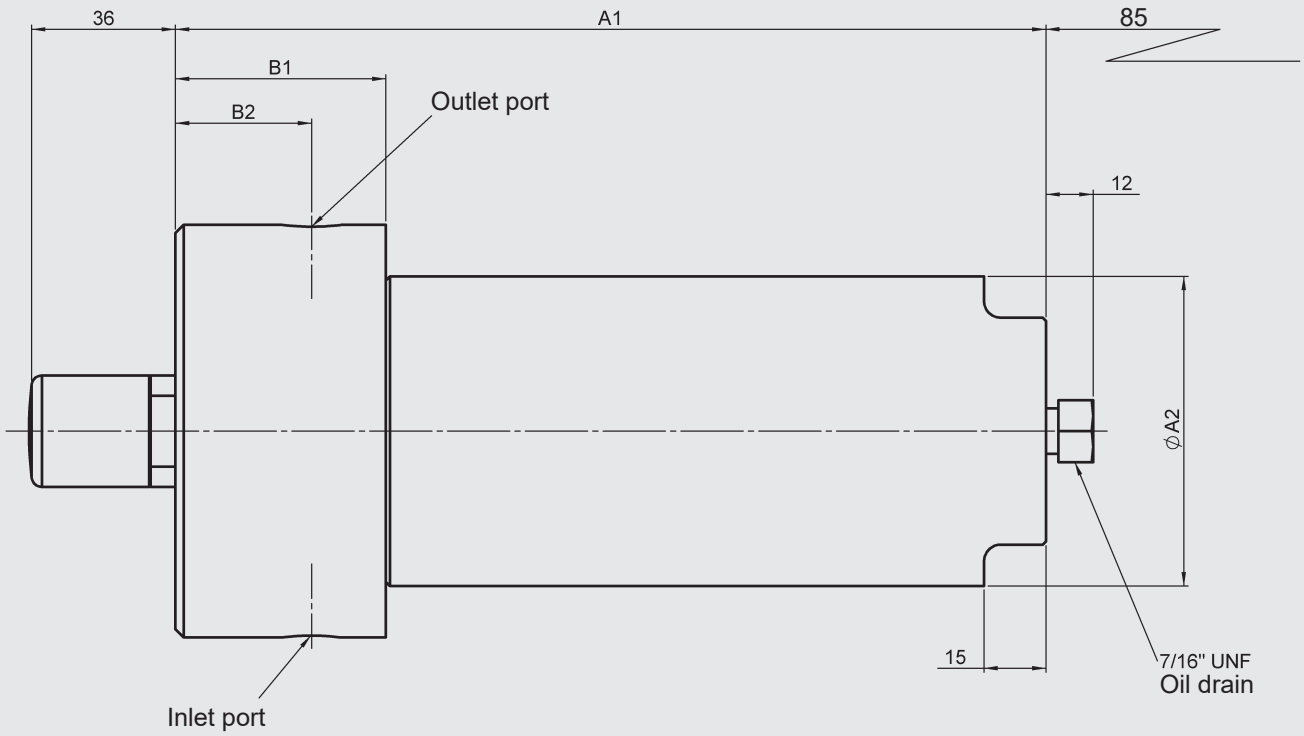

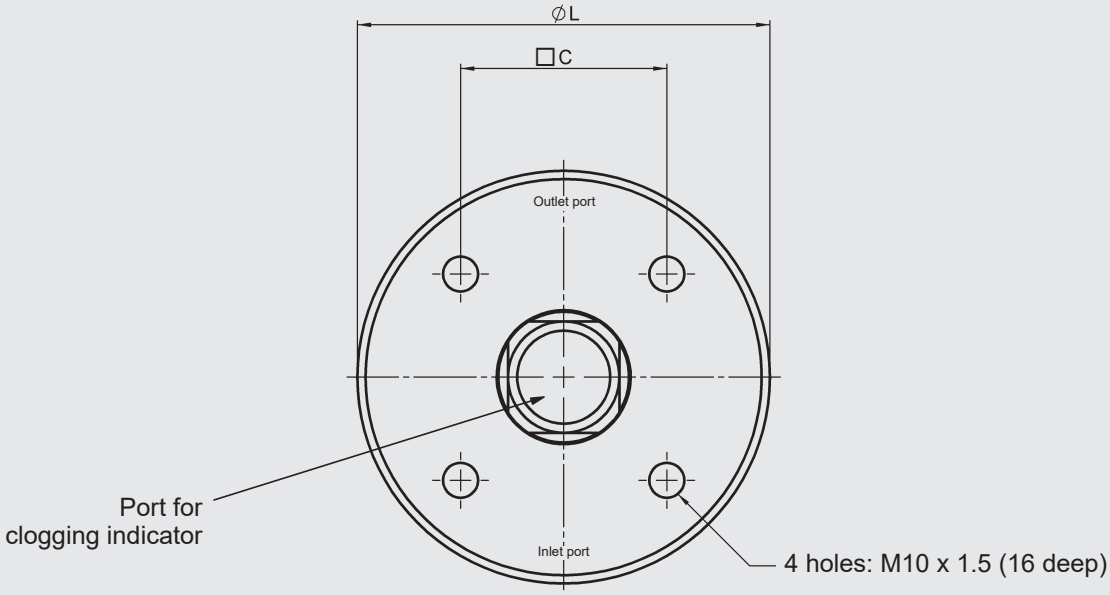

ACSSF	A1	A2	B1	B2 ±5mm	C	L
60	234	85	60	37	50	100
110	303.5	85	60	37	50	100
160	286	127	65	40	60	127
240	344	127	65	35	60	127

NOTE

The information in this brochure relates to the operating conditions and applications described.
For applications or operating conditions not described, please contact the relevant technical department.
Subject to technical modifications.

HYDAC Filtertechnik GmbH
Industriegebiet
D-66280 Sulzbach/Saar
Tel.: 0 68 97 / 509-01
Fax: 0 68 97 / 509-300
Internet: www.hydac.com
E-Mail: filter@hydac.com